In this Instruction Manual, we will endeavor to describe various matters related to the operation of the GSK25iMc/GSK25iTc Series Bus-type Milling/Turning CNC System. It is not possible to describe in detail all the operations that need not be done and/or cannot be done in the CNC System due to length constraints and specific product usage. Therefore, anything not specifically indicated in this Instrion Manual shall be deemed to be the operation that is "impossible" or "not permitted".

The copyright of this Instruction Manual belongs to GSK CNC Equipment Co., Ltd., and it is illegal for any units or individuals to publish or copy it. GSK CNC Equipment Co., Ltd. reserves the right to investigate their legal liabilities.

Preface

Dear customer:

We are honored and grateful to you for choosing GSK25iMc/GSK25iTc Series Bus-type Milling/Turning CNC System newly developed, designed, and manufactured by GSK CNC Equipment Co., Ltd.

This manual is the PLC Manual for GSK25iMc/GSK25iTc Series Bus-type Milling/Turning CNC System. This manual describes in detail the PLC programming and functions of the GSK25iMc/GSK25iTc Series Bus-type Milling/Turning CNC System.

Improper operation will lead to accidents, thus personnel with appropriate qualifications are required to operate the system.

Please read this Instruction Manual carefully before operation!

Special tip: The power supply installed on (in) the chassis is specially provided for the CNC Systems manufactured by our company.

Users are not allowed to use this power supply for other purposes. Otherwise, great danger will be cause

Safety Warnings

Before installing, connecting, programming and operating the product, you must read the Instruction Manual of this product and the Operating Manual provided by the machine manufacturer in detail, and carry out the relevant operations in strict accordance with the requirements of the Instruction Manual and the Operating Manual of machine.

This manual contains safety precautions to protect the user and prevent damage to the machine. These precautions are divided into warnings and cautions according to the nature of the safety. Supplementary information is described as notes. Please read the warnings, cautions and notes carefully before operating the machine.

Warnings

Failure to follow the specified operating methods or steps may result in injury to the user or damage to the equipment.

Note

Failure to follow the specified operation methods or steps may damage the equipment.

Notes

Notes are used to indicate supplementary information in addition to warnings and cautions.

Statement

- This manual describes as many different things as possible, but it is not possible to describe all the things that can or cannot be done due to many possibilities involved. Consequently, contents not specifically described in this manual are considered unusable.

Note

- The product functions and technical indexes described in this manual (such as accuracy, speed, etc.) are only applicable to this product. For the CNC machine equipped with this product, the actual function configuration and technical performance are determined by the design of the machine manufacturer. The function configuration and technical indexes of the CNC machine are subject to the Operating Manual of the machine manufacturer.
- Please refer to the Operating Manual provided by the machine manufacturer for the function and meaning of keys on the machine panel.

Important Notice:

■ **Transport and storage**

- **Product packing boxes shall not be stacked more than six layers**
- **Do not climb, stand or place heavy objects on product packing boxes**
- **Do not use cables connected to the product to drag or carry the products**
- **Do not collide or scratch the panel and display screen**
- **Product packing boxes shall be protected from dampness, exposure to the sun and rain**

■ **Unpacking inspection**

- **Please confirm whether it is the product you purchased after opening the package**
- **Check whether the product is damaged in transit**
- **Confirm whether the components are complete and damaged according to the list**
- **Please contact our company in time in case of product model inconsistency, missing accessories or transport damage**

■ **Wiring**

- **Participants in wiring and inspection must be competent professionals**
- **The product must be grounded reliably, with the grounding resistance no greater than 0.1 Ω. Neutral wire shall not be used instead of grounding wire**

- **The wiring must be correct and firm so as not to cause product failure or unintended consequences**
- **Surge absorbing diodes must be connected to the product in the specified direction, otherwise the product will be damaged**
- **The product must be powered off before plugging or unplugging or opening the product chassis**

■ **Servicing**

- **Participants in repair must be competent professionals**
- **Power supply must be cut off before repairing or replacing components**
- **The failure must be checked in case of short circuit or overload, and it can be restarted after troubleshooting**
- **The power to the product shall not be frequently turned on or off. The interval shall be at least 1 min if re-energization is required after power-off**

Safety Responsibility

Manufacturer's responsibility for safety

- The manufacturer shall be responsible for the hazard of the supplied CNC System and accompanying accessories that have been eliminated and/or controlled in design and structure.

- The manufacturer shall be responsible for the safety of the supplied CNC System and accompanying accessories.

- The manufacturer shall be responsible for the use information and advice provided for the user.

Users' responsibilities for safety

- Users shall be familiar with and master the safe operation through learning and training of safe operation of CNC System.

- Users shall be responsible for the safety and hazards as a result of adding, changing or modifying the original CNC System and accessories by themselves.

- Users shall be responsible for any hazard caused by failure to operate, adjust, maintain, install, store and transport the products in accordance with the Instruction Manual.

All specifications and designs are subject to change without prior notice.

This manual shall be kept by final users.

Thank you very much for using the products of GSK CNC Equipment Co., Ltd.

and your friendly support to our company!

Table of Contents

Installation and Connection

Volume 1 Installation and connection....2
Precautions for Connection and Installation....2
Chapter 1 Overview of System....5
1.1 Overview of GSK25iMc modules....5
1.2 Interconnection Diagram of GSK25iMc with GR Series Bus Servo Drive....7
Chapter 2 Installation Dimensions....9
2.1 Installation dimensions of GSK25iMc-H host (horizontal 8.4-inch color screen)....9
2.2 Installation dimensions of GSK25i-MPU-08BH (horizontal) operation panel....9
2.3 Installation dimensions of GSK25iMc-V host chassis (vertical 10.4-inch color screen)....10
2.4 Installation dimensions of GSK25i-MPU-10BV (vertical) operation panel....10
2.5 Installation dimensions of I/O unit....11
2.6 Splitter MCT07 (adaptive for IOL-02F/03F)....15
2.7 Installation mode and size of switching power supply....16
Chapter 3 GSK 25iMb/Tb System Host Interface....19
3.1 System host interface....19
Chapter 4 Operation Panel Interface....21
4.1 Machine operation panel interface....21
4.2 Host communication interface XS21....21
4.3 Emergency stop power-on interface XS22....22
Chapter 5 I/O Unit Interface....23
5.1 I/O unit specification....23
5.2 IOR-04T, IOR-44T interface....24
5.3 IOR-21F, IOR-44F interface....31
Chapter 6 PC Communication Line....37
6.1 System connects PC Ethernet port communication....37
Chapter 7 MPG Connecting Line....39
7.1 The external MPG unit is connected with the host chassis....39
7.2 Connection of external MPG signal wire....39
Chapter 8 Operation Panel Signal Wire....41
8.1 Operation panel connection....41
8.2 Connection of operation panel cable....41
Chapter 9 Connection of Ethernet Communication Wire....44
9.1 Ethernet communication connection for GSK25iMc system....44
9.2 Ethernet cable connection....45
Chapter 10 Spindle Servo Signal Wire Provided....46
10.1 Spindle driver connection....46
Chapter 11 Spindle Frequency Converter Connecting Line Provided....53
11.1 Connection of spindle frequency converter....53
11.2 Connection of spindle frequency converter cable....53
Chapter 12 Connection Method for System Power-on and Vertical Axis Brake Control....55

Volume 2 Commissioning

Volume 2 Commissioning 58
Chapter 1 Parameter Configuration 60
1.1 Precautions for CNC parameter setting 60
1.2 Password authority operation 60
1.3 Parameter setting operation 61
1.4 Ethernet communication commissioning parameter 65
1.5 Relevant parameters of bus-type servo 67
1.6 Related parameter configuration of spindle 71
1.7 Speed parameter configuration 78
1.8 Acceleration parameter configuration 78
1.9 Back-to-zero configuration of system 80
1.10 Other common parameter configuration 81
1.11 Other function-related parameters 81
1.12 Synchronous axis commissioning 82
1.13 Axis 4 commissioning 84
Chapter 2 Accuracy Compensation 86
2.1 Reverse gap compensation 86
2.2 Unidirectional pitch error compensation 86
2.3 Bidirectional pitch error compensation 94
Chapter 3 Function Description and Commissioning of The PLC with Standard Configuration 98
3.1 Input/Output address definition 99
3.2 Emergency stop 105
3.3 Hardware over-travel 106
3.4 Over-travel release 106
3.5 Single-step function 106
3.6 Tricolor light control 106
3.7 Lubrication pump control 106
3.8 Cooling pump control 107
3.9 Hydraulic pump control 108
3.10 Workpiece blowing control 108
3.11 Chip remover control 108
3.12 Work light control 109
3.13 Automatic power-off function of the system 109
3.14 Protective door and door lock control function 109
3.15 External MPG box function 110
3.16 Selection of two control modes for fast rate 111
3.17 Relevant functions of spindle 111
3.18 Orientation of spindle 112
3.19 Spindle rigid tapping function 112
3.20 Spindle gear shift (M/T gear shift selection for digital/analog spindle) 112
3.21 Selection of indexing table and CNC turntable (Axis 4 only) 115
3.22 Continuous operation of air pressure alarm 117
3.23 Parameter setting 117
3.24 M Code List 121
3.25 Commissioning of turntable tool magazine 121
3.26 Manipulator tool magazine commissioning 125

3.27 Turret (gripper arm) tool magazine (K12#3=1)..... 130
3.28 Tool changing macroprogram with turntable, manipulator and turret tool magazine three-in-one.... 133
3.29 Description of PLC alarm information..... 135

Volume 3 Parameters

Volume 3 Parameters..... 141
Chapter 1 Parameter Display..... 143
Chapter 2 Set Parameters in MDI Mode..... 145
Chapter 3 Set or Maintain System Parameters through PC Upper Computer Software..... 147
3.1 Editing of system parameters..... 147
3.2 Editing of pitch compensation data..... 147
Chapter 4 Parameter Description..... 149
4.1 Setting parameter (1~99)..... 149
4.2 Communication and configuration parameter (100~999)..... 150
4.3 Coordinate parameter (1000~1199)..... 156
4.4 Feed speed parameter (1200~1399)..... 170
4.5 Interpolation and acceleration/deceleration control parameters (1400~1599)..... 175
4.6 Show editing parameter (1600~1799)..... 186
4.7 Programming parameter (1800~1999)..... 191
4.8 Fixed cycle parameter (2000~2099)..... 198
4.9 Rigid tapping parameter (2100~2299)..... 199
4.10 Input and output parameters (2400~2599)..... 205
4.11 Tool management parameter (2600~2799)..... 209
4.12 Pitch compensation parameter (2800~2999)..... 212
4.13 Turning cycle parameter (3000~3199)..... 214
4.14 Servo parameter (4000~4999)..... 221
4.15 Spindle control parameter (5000~5999)..... 256
4.16 User macroprogram parameters (6000~6999)..... 301
4.17 PLC axis control parameters (7000~7199)..... 304
4.18 Angular axis control parameter (7100~7119)..... 305
4.19 Normal direction control parameter (7120~7139)..... 306
4.20 Abnormal load detection control parameter (7201~7229)..... 307
4.21 Polygon cutting function parameter (7610~7629)..... 308
4.22 Robot control parameter (7800~7899)..... 309
4.23 5-axis machining parameters (8000~8999)..... 311
Appendix..... 318
Appendix I System Alarm List..... 320
1.1 System alarm (PS alarm)..... 320
1.2 Servo and position control alarm (PV alarm)..... 345
1.3 Spindle alarm (PD alarm)..... 349
Appendix II Comparison Table of Servo Units and Servo Motors..... 351

Volume 1 Installation and Connection

Precautions for Connection and Installation

1. Requirements for machine electrical cabinet

The machine electrical cabinet for installation system and drive unit shall be of fully-enclosed dust-proof design, and shall be capable of effectively preventing dust, lubricating oil, coolant and other liquids from entering any part

of the system, with the temperature difference between inside and outside the electrical cabinet no more than 10℃. If this requirement cannot be met, a heat exchange system must be installed. The maximum ambient temperature around the system shall not exceed 45℃.

2. System installation location

The CNC host is the control core of the whole CNC machine, and priority must be given to considering its installation at the position with minimum temperature rise and electromagnetic radiation interference. In the machine electrical cabinet, the high-power spindle drive unit and the feed axis drive unit generate a large amount of heat when working, thus they shall be installed on the top as far as possible, with the I/O unit installed under them.

3. Protection earthing

The machine electrical cabinet shall be provided with protective grounding whose continuity shall meet the requirements of GB 5226.1-2008. Good grounding is also a prerequisite for stable system operation. The grounding wires of all parts of the system shall not be connected in series with each other. A grounding bar (copper plate with thickness ≥ 3 mm can be used) shall be arranged in the electrical cabinet. The grounding bar shall be connected to the grounding body with grounding resistance no greater than 0.1 Ω connected to the ground. The protective grounding terminals of all parts of the system shall be connected to the grounding bar separately with thick and short yellow-green wires.

4. Interference suppression

Although the CNC system has been designed with anti-interference measures to prevent external jamming factors from affecting CNC to some extent, the following measures must be taken when installing and connecting it in order to ensure the reliable and stable operation of CNC:

a) Isolation transformer is used to supply power to CNC.

b) The installation of CNC equipment shall be far away from those which are easy to cause interference;

c) The CNC signal cable shall be shield cable as short as possible, with shielded layer grounded and installation away from the part with strong electrical and electromagnetic interference.

It shall be arranged as straight as possible and cannot be wound into a ring, otherwise easy to pick up interference signals;

d) The RC circuit is connected in parallel at both ends of the AC coil, and it shall be installed as close to the inductive load as possible;

e) Free-wheeling diodes are connected inverse-parallel at both ends of the DC coil;

f) A surge absorber is connected in parallel at the winding end of the AC motor.

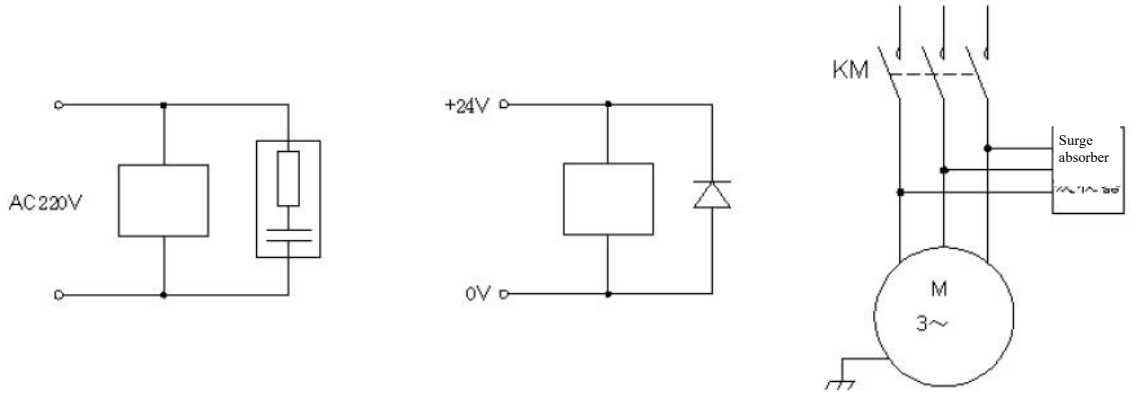

Wiring Diagram of Protection Circuit

Chapter 1 Overview of System

1.1 Overview of GSK25iMc modules

The GSK25iMc-H CNC System is composed of: GSK25iMc-H host and GSK25i-OPMbH machine operation panel. Specification parameters: Installation structure: Horizontal installation Display: 8.4-inch LCD Power supply: DC24V Power: 35W	
The GSK25iMc-V CNC System is composed of: GSK25iMc-V host and GSK25i-OPMbV machine operation panel. Specification parameters: Installation structure: Vertical installation Display: 10.4-inch LCD Power supply: DC24V Power: 38W	

Supporting I/O unit of GSK25iMc Series CNC System:

1. IOR-04T (standard)
   DI/DO:48/32
   Power supply: DC24V

2. IOR-44T (optional)
   DI/DO:48/32
   AO: 4 (0 ~ 10V analog voltage)
   Power supply: DC24V

3. IOR-21F (optional)
   DI/DO:24/16
   Power supply: DC24V
4. IOR-44F (standard)
   DI/DO:48/32
   AO: 4 (0 ~ 10V analog voltage)
   Power supply: DC24V

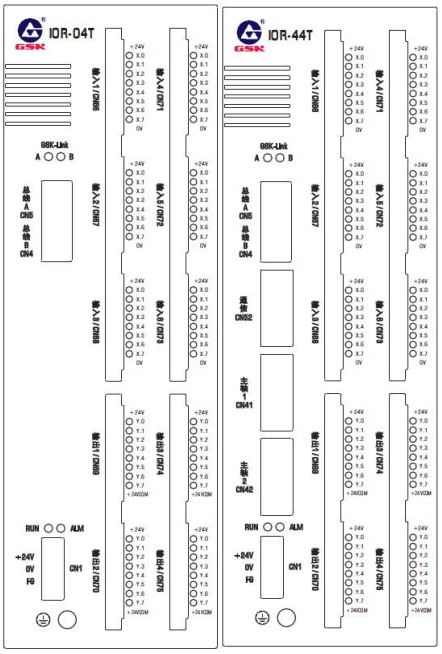

IOR-04T **IOR-44T**

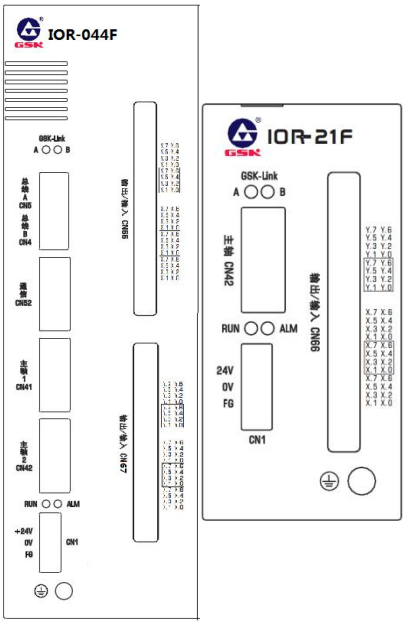

IOR-44F **IOR-21F**

1.2 Interconnection Diagram of GSK25iMc with GR Series Bus Servo Drive

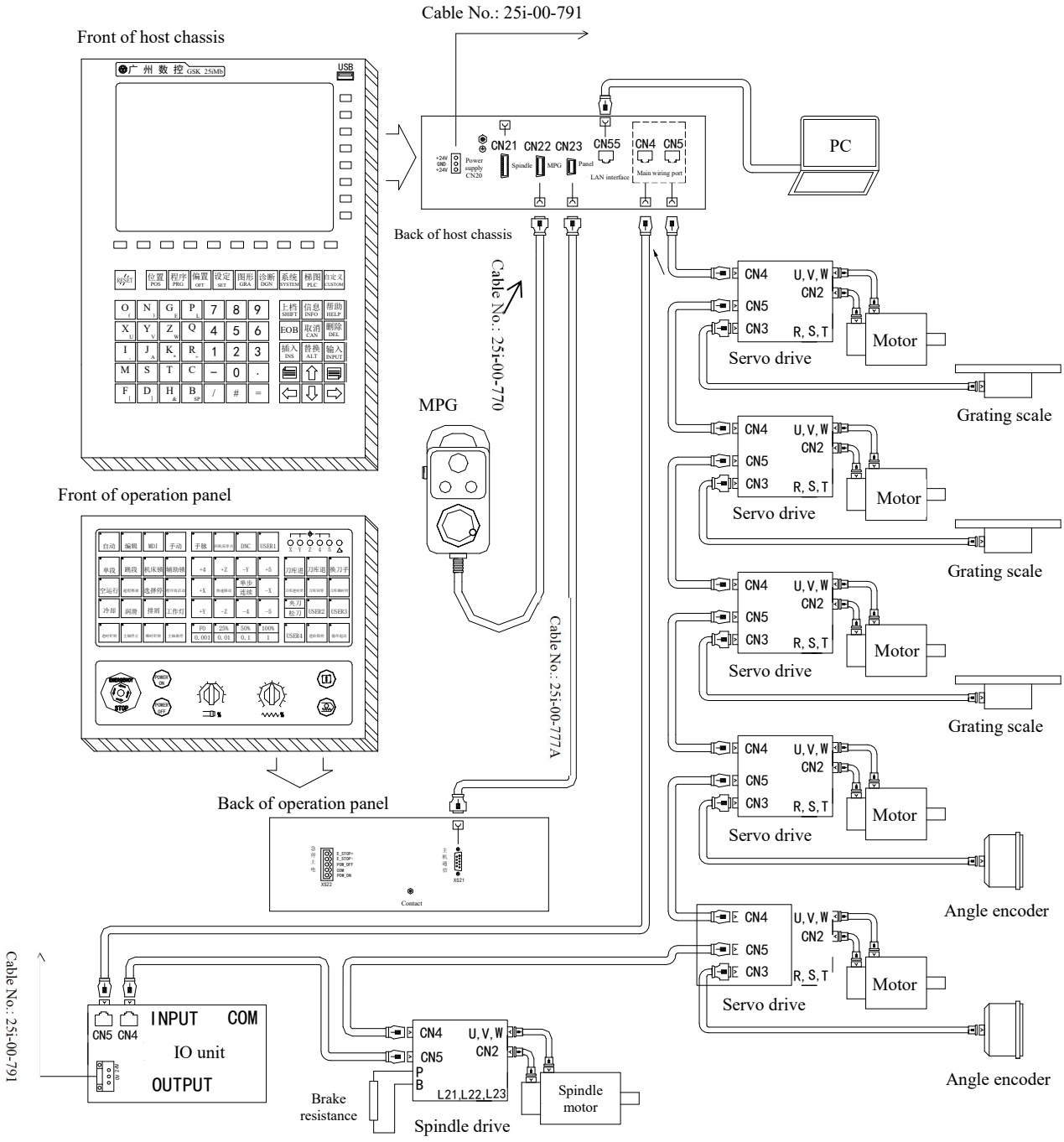

Chapter 2 Installation Dimensions

2.1 Installation dimensions of GSK25iMc-H host (horizontal 8.4-inch color screen)

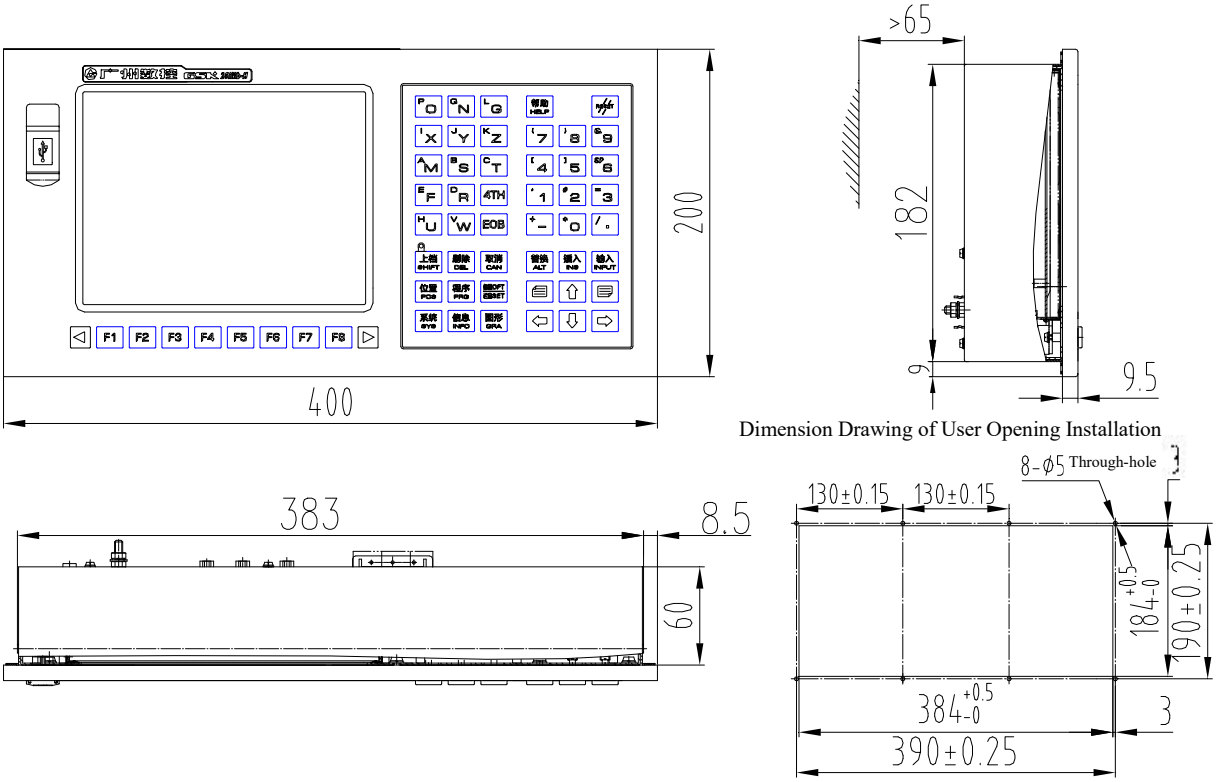

Dimension Drawing of User Opening Installation

2.2 Installation dimensions of GSK25i-MPU-08BH (horizontal) operation panel

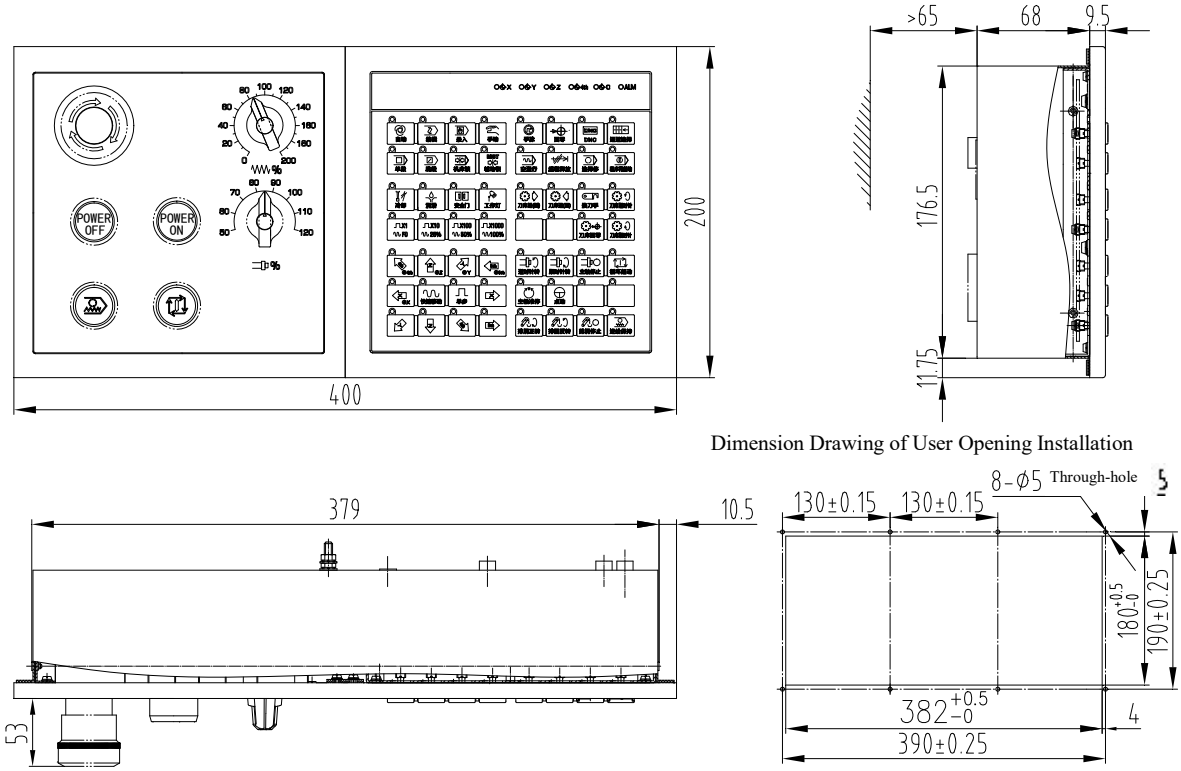

Dimension Drawing of User Opening Installation

2.3 Installation dimensions of GSK25iMc-V host chassis (vertical 10.4-inch color screen)

Dimension Drawing of User Opening Installation

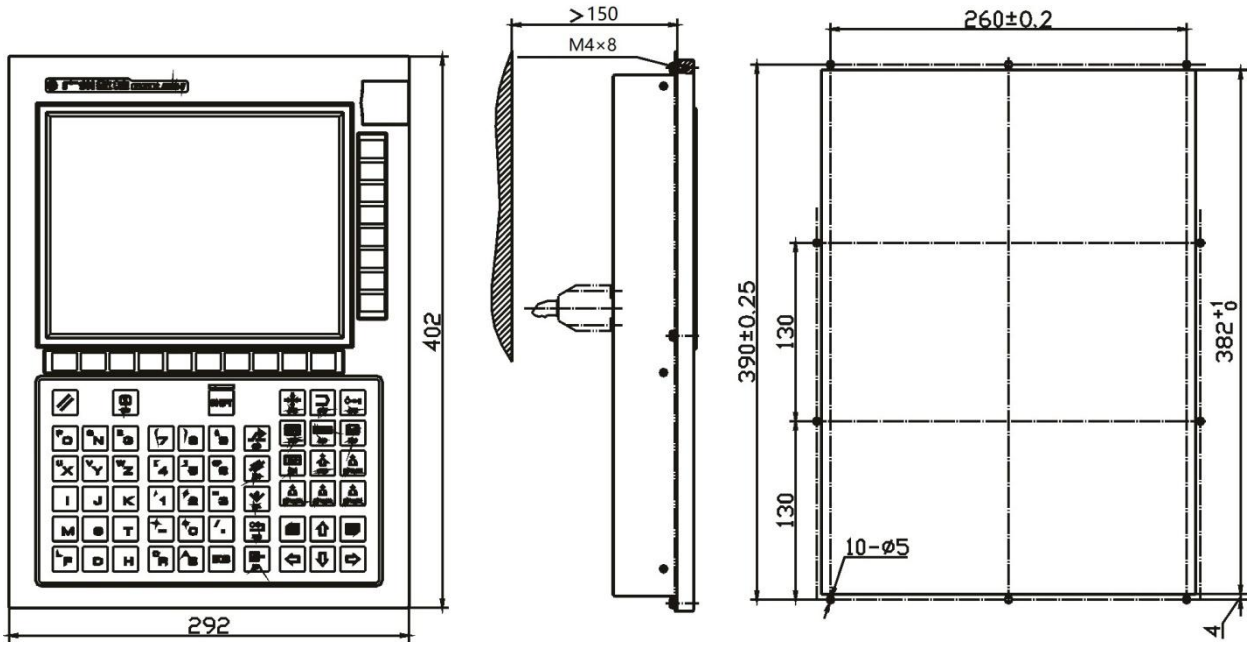

2.4 Installation dimensions of GSK25i-MPU-10BV (vertical) operation panel

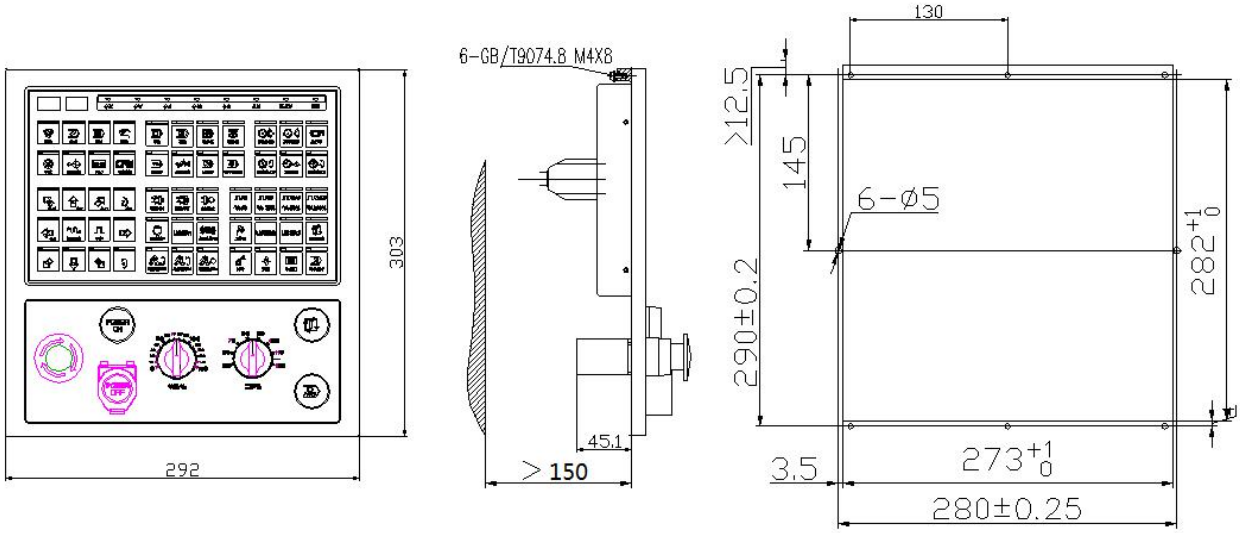

2.5 Installation dimensions of I/O unit

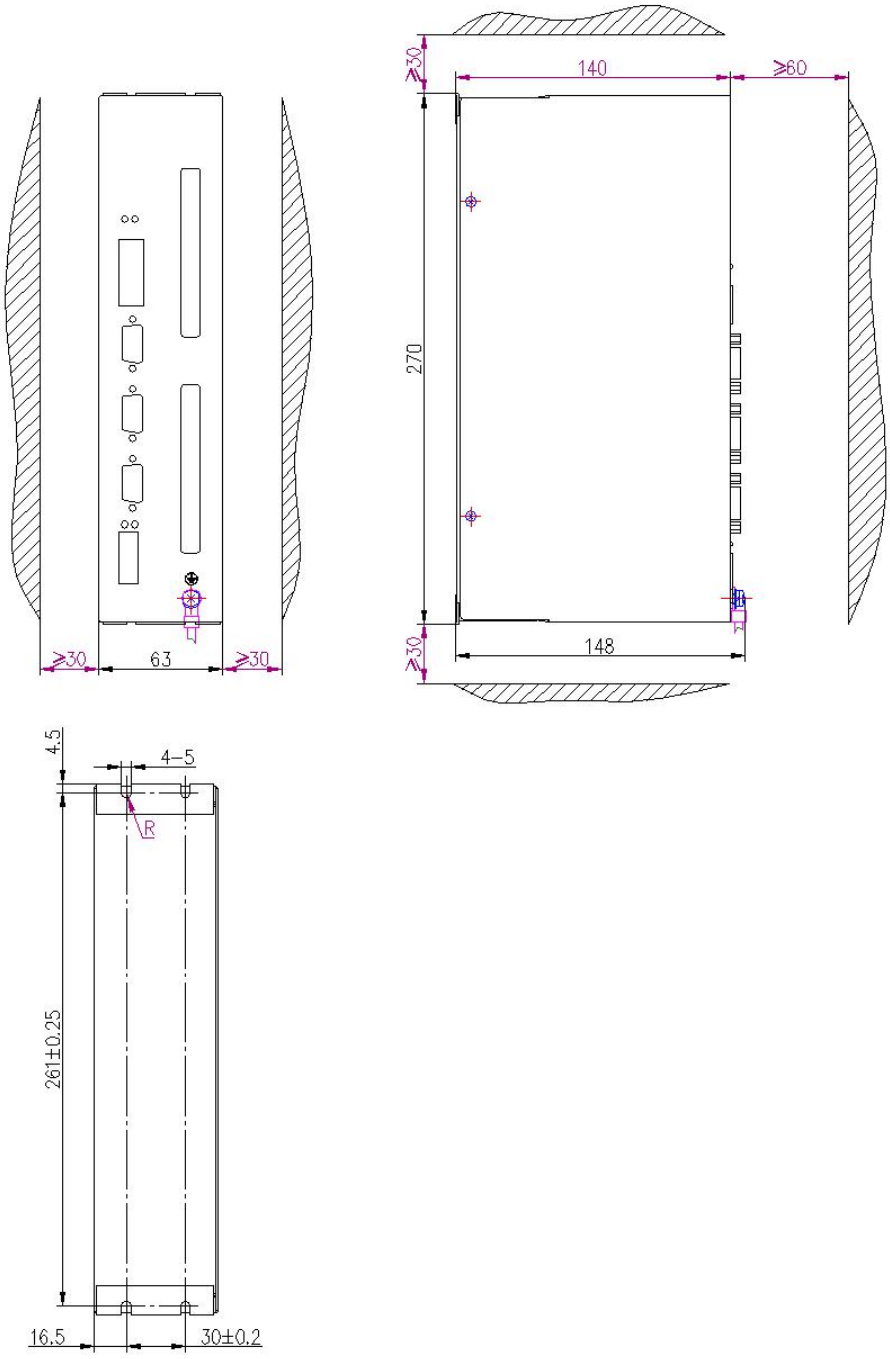

IOR-44F

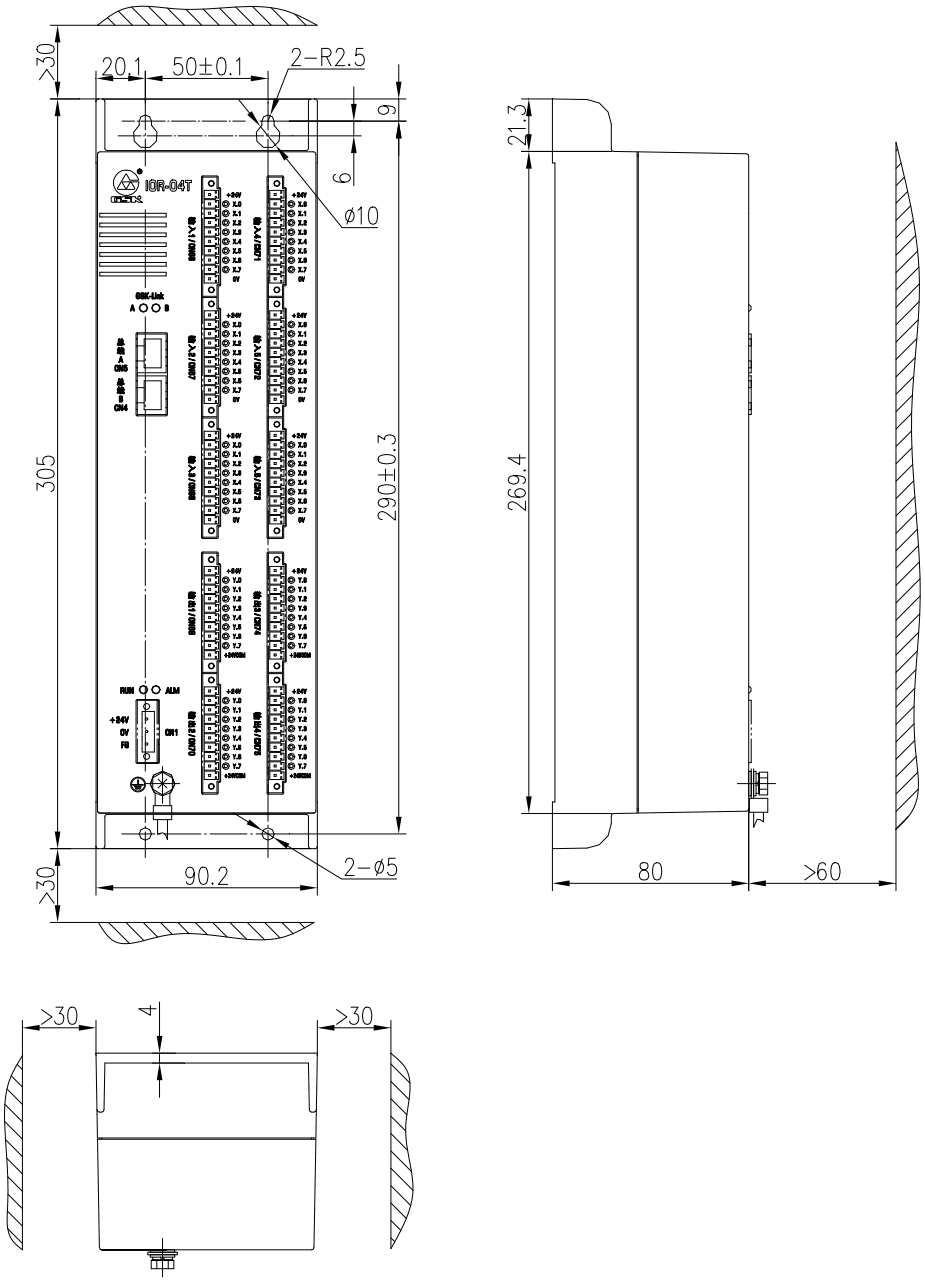
>30
20.1
50±0.1
2-R2.5
9
6
ø10
305
290±0.3
>30
90.2
2-ø5
21.3
269.4
80
>60
>30
4
>30

IOR-04T

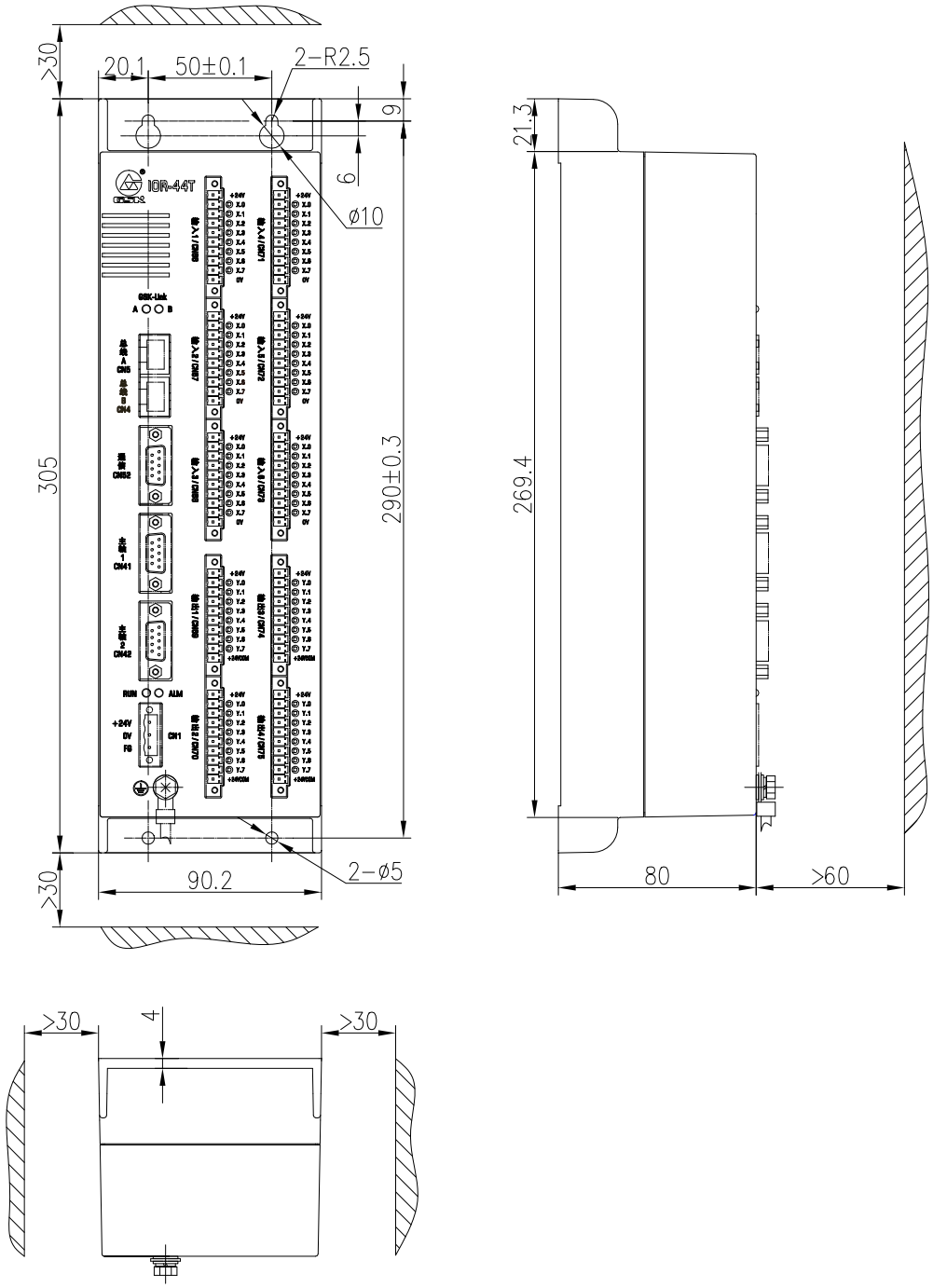
>30
20.1
50±0.1
2-R2.5
9
6
ø10
305
290±0.3
90.2
2-ø5
>30
21.3
269.4
80
>60
>30
4
>30

IOR-44T

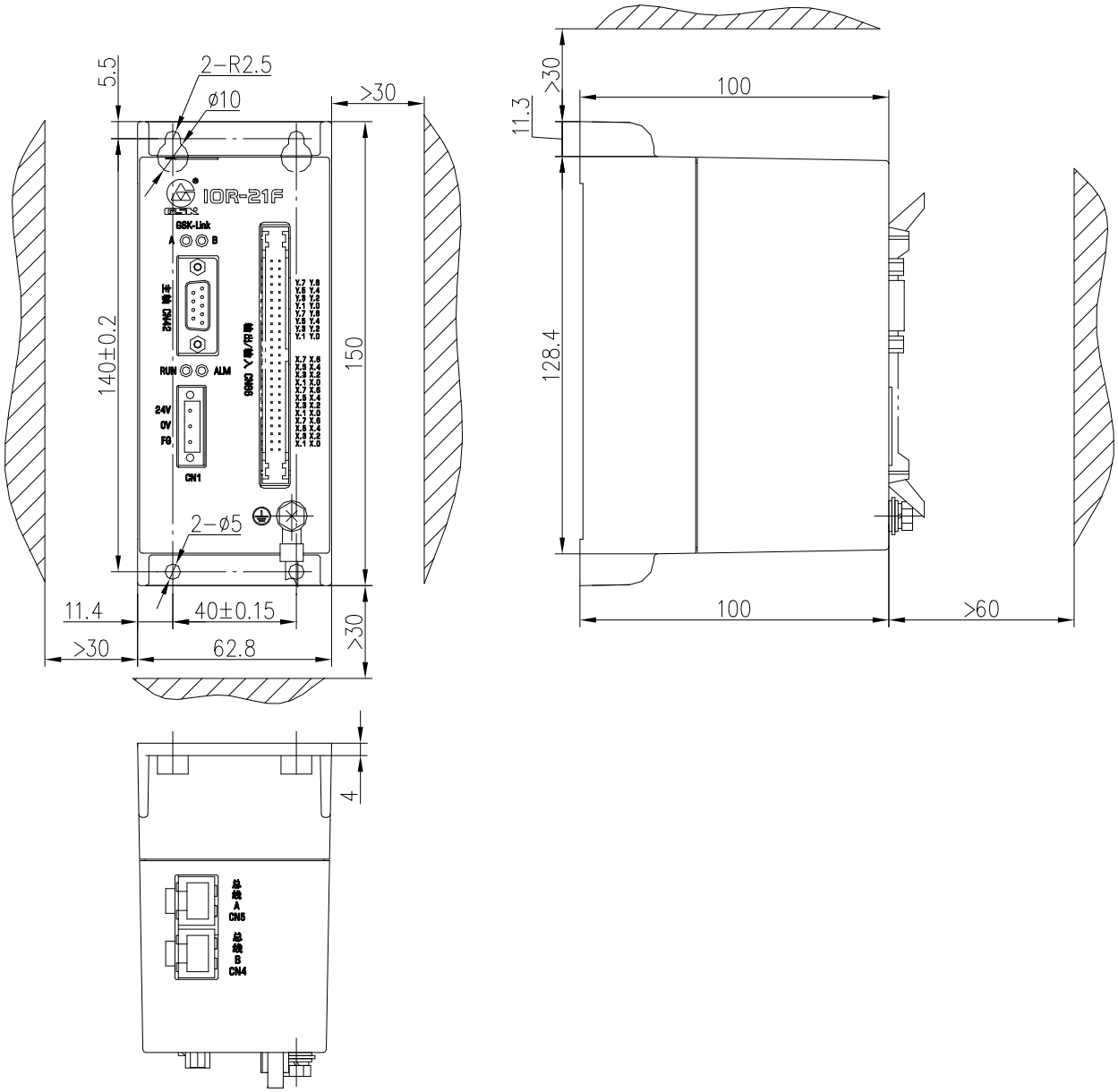
5.5
2-R2.5
ø10
>30
IOR-21F
GSK-Link
A
B
RUN
ALM
24V
0V
FG
CN1
140±0.2
150
2-ø5
11.4
40±0.15
>30
62.8
>30
4
总线 A CN5
总线 B CN4
>30
11.3
100
128.4
100
>60

IOR-21F

2.6 Splitter MCT07 (adaptive for IOL-02F/03F)

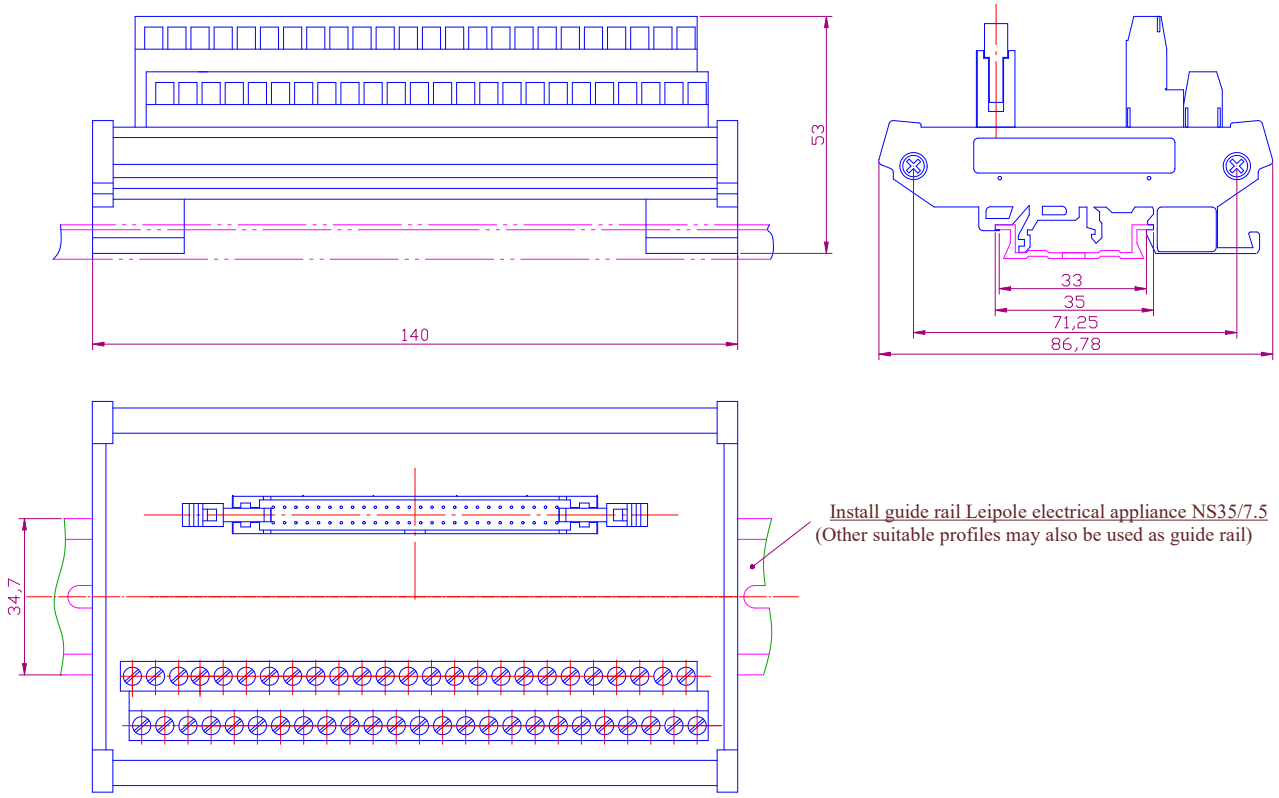

2.7 Installation mode and size of switching power supply

Schematic Diagram of PDF-100 Series Mounting Bracket Assembly

Installation method for bracket:

1. PSU is secured to DRP-01 by using 3-M3X4 (PM) screws.
2. DRP-01 is then secured to the client system by using 4-M4X6 (PM).

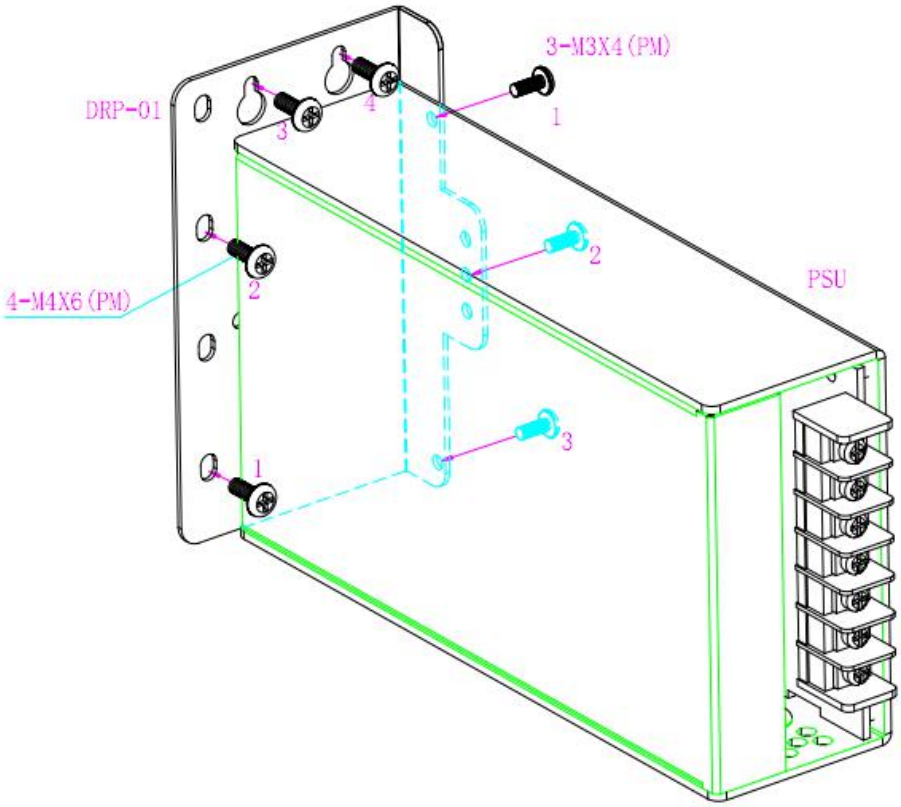

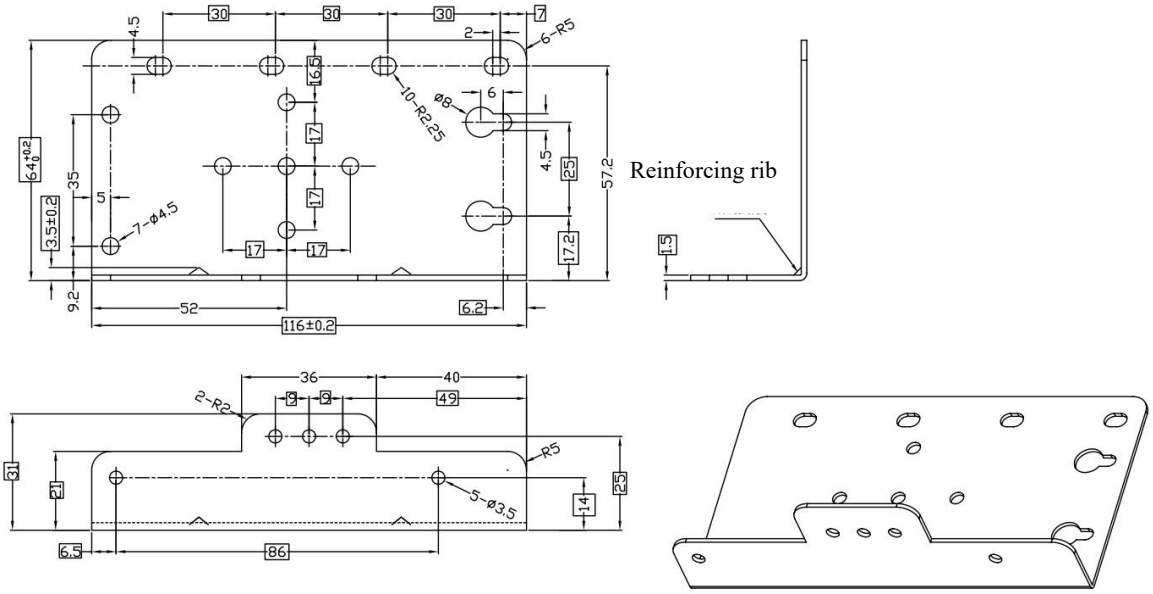
Reinforcing rib

Chapter 3 GSK 25iMb/Tb System Host Interface

3.1 System host interface

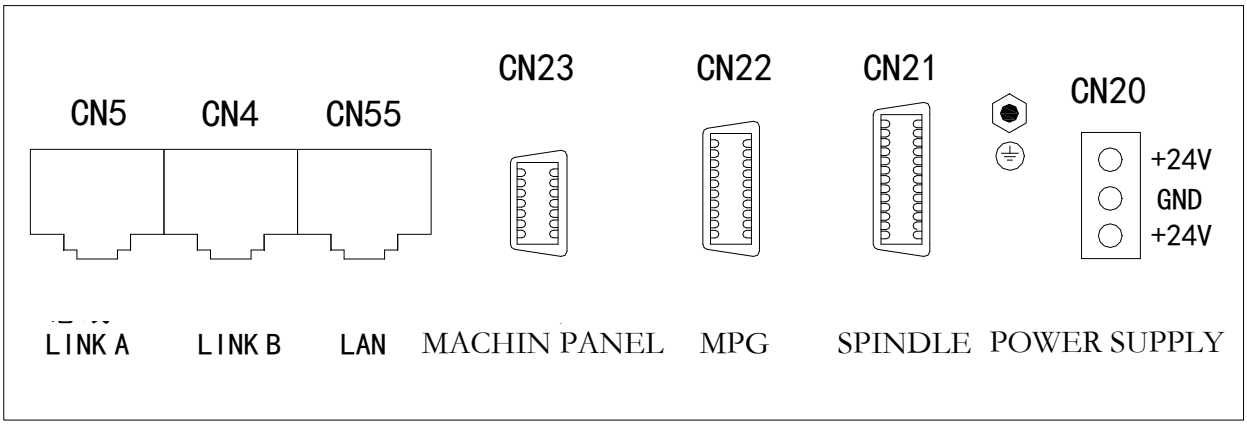

CN5: Link A

Pin No.	Pin description
1	TX1+
2	TX1-
3	RX1+
4	NC
5	NC
6	RX1-
7	NC
8	NC

CN4: Link B

Pin No.	Pin description
1	TX2+
2	TX2-
3	RX2+
4	NC
5	NC
6	RX2-
7	NC
8	NC

CN55: LAN

Pin No.	Pin description
1	TX1+
2	TX1-
3	RX1+
4	NC
5	NC
6	RX1-
7	NC
8	NC

CN20: Power supply

○	P24V
○	P0V
○	P24V

GN23: Operation panel interface

1	P24V	2	P24V
3	P0V	4	P0V
5	I03	6	RXD-
7	RXD+	8	DNCRX
9	DNCTX	10	P0V
11	P0V	12	I02
13	TXD+	14	TXD-

GN22: MPG interface

1	+5V	11	P_24V
2	HDCRX	12	HDCTX
3	STP	13	
4	LED	14	PB-
5	HX	15	PB+
6	HY	16	PA+
7	HZ	17	PA-
8	H4	18	X100
9	H5	19	X1
10	P_0V	20	X10

CN21: Spindle interface

1	SVC+	14	PZ-
2	I01	15	PZ+
3	SVC-	16	PB+
4	CP+	17	PB-
5	CP-	18	PA+
6	DIR-	19	PA-
7	DIR+	20	P_5V
8	ALM	21	P_0V
9	COIN	22	VP
10	ZSP	23	EN
11	VPO	24	STA0
12	SAR	25	ZSL
13	P_24V	26	ARST

Chapter 4 Operation Panel Interface

4.1 Machine operation panel interface

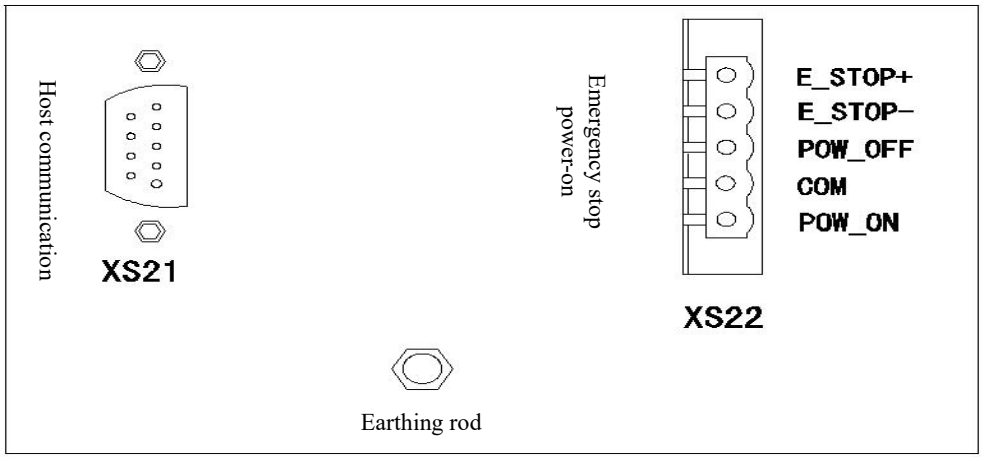

Machine operation panel interface

4.2 Host communication interface XS21

1	P24V	2	
3	P0V	4	
5		6	RXD-
7	RXD+	8	
9		10	
11	0V	12	
13	TXD+	14	TXD-

*TXD +, TXD-, RXD+, RXD-: Differential communication signals of RS485.

* 0V: The reference ground of differential signal.

* P24V, P0V: 24V supply input.

4.3 Emergency stop power-on interface XS22

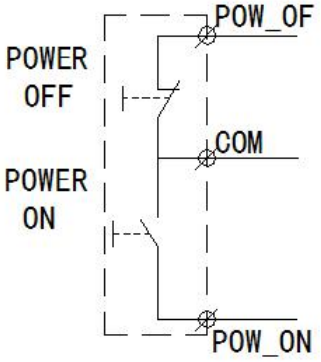

Power-on interface

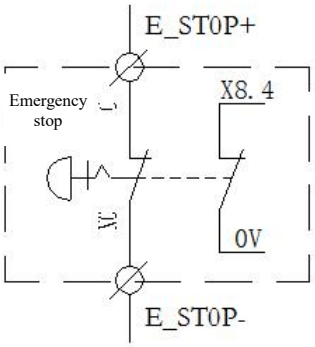

Notes:
The emergency stop button has two sets of contacts, one of which is connected to the input signal X8.4 inside the operation panel
The other is used for emergency stop control of external equipment

Emergency stop interface

Chapter 5 I/O Unit Interface

5.1 I/O unit specification

The GSK 25iMb series products offer the following I/O units with three specifications:

I/O Unit Specification Sheet

Name	I/O points	I/O type
IOR-44F	DI: 48 DO: 32 AO: 4 (0 ~ +10 V output)	50PIN horn socket, High level input, High level output
IOR-04T	DI: 48DO: 32	Terminal wiring type, High level input Low level output
IOR-44T	DI: 48 DO: 32 AO: 2 (0 ~ +10 V output)	Terminal wiring type, High level input, Low level output
IOR-21F	DI: 24 DO: 16 AO: 2 (0 ~ +10 V output)	50PIN horn socket, High level input, High level output

5.2 IOR-04T, IOR-44T interface

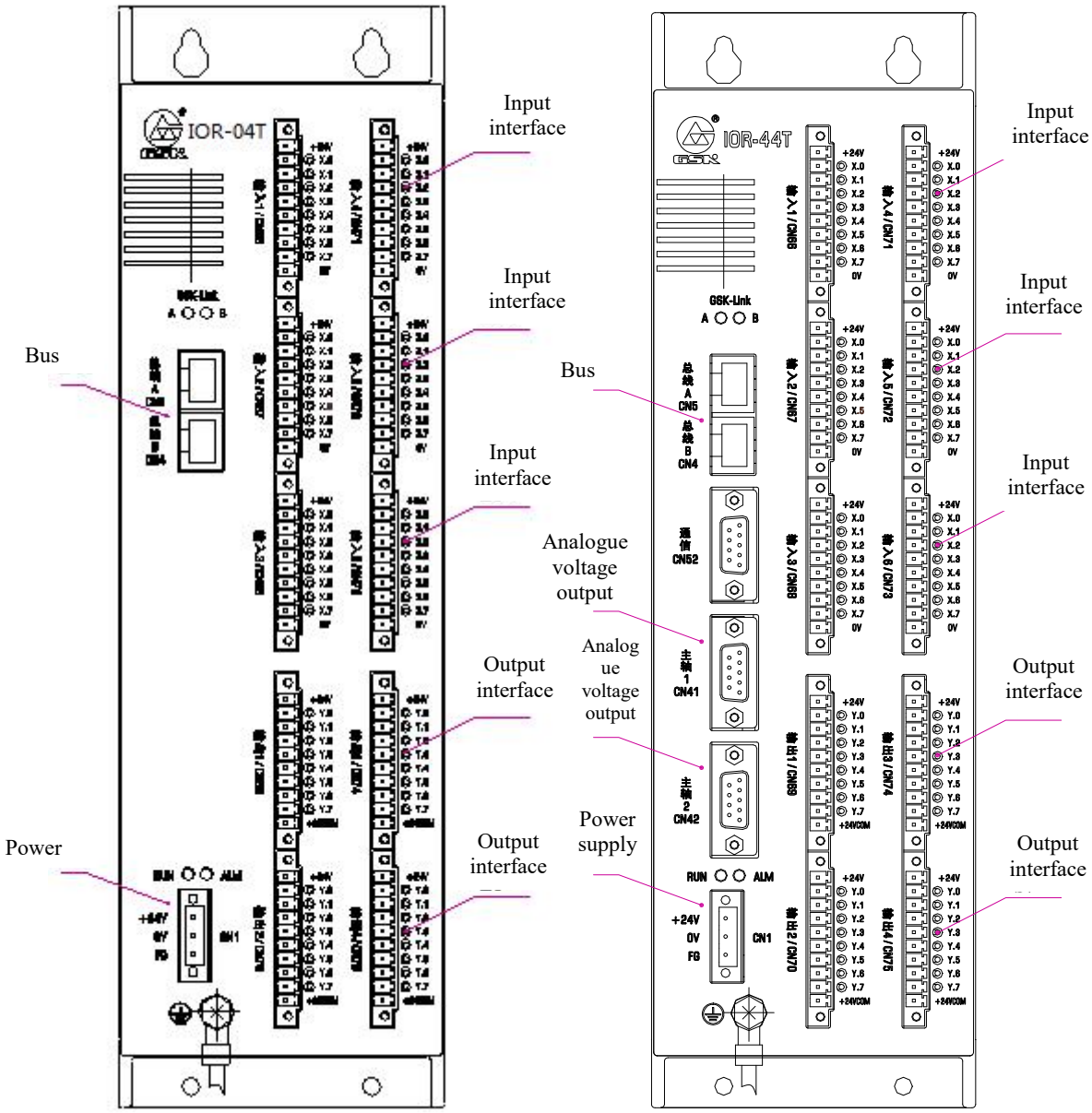

IOR-04T interface IOR-44T interface

5.2.1 Industrial Ethernet bus interface CN5, CN4

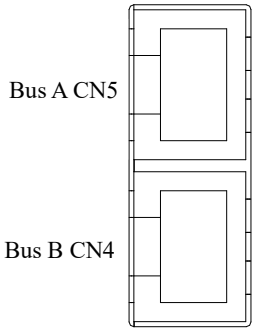

The IOR series I/O units are connected to the CNC system through the GSKLINK bus interface. The GSKLink bus communication wiring is shown in the following figure:

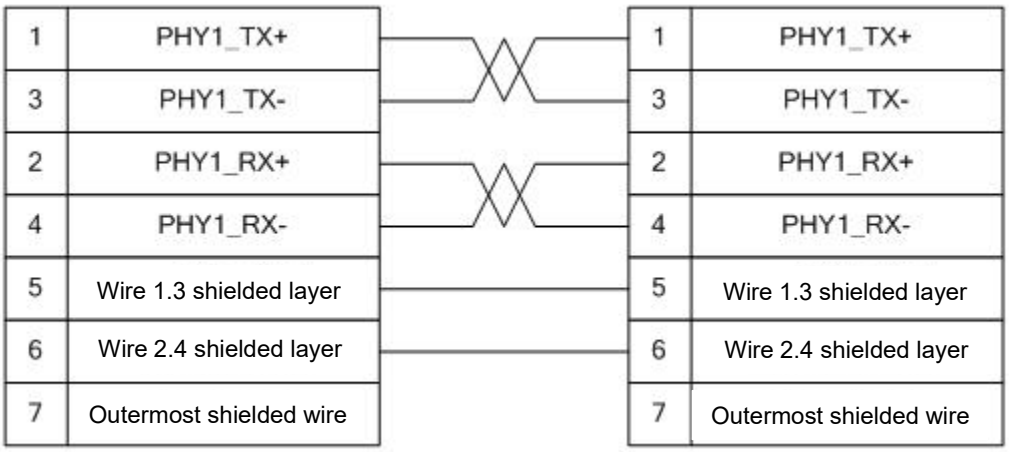

5.2.2 I/O unit power interface CN1

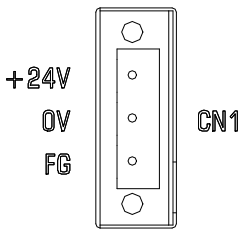

5.2.3 Analog voltage output interface CN41, CN42

- Spindle 1 interface

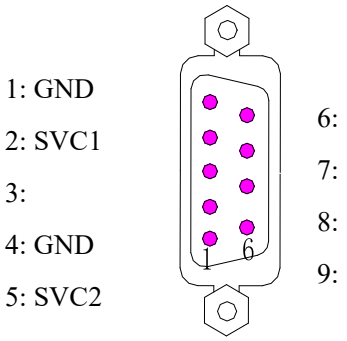

Spindle 1 interface (9-pin)

Pin	Signal	Description
1	GND	Signal ground
2	SVC1	First analog output
4	GND	Signal ground
5	SVC2	Second analog output

■ Spindle 2 interface

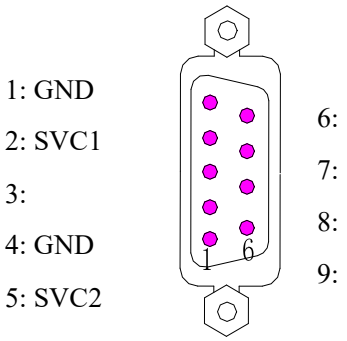

Spindle 2 interface (9-pin)

Pin	Signal	Description
1	GND	Signal ground
2	SVC3	Third analog output
4	GND	Signal ground
5	SVC4	Fourth analog output

5.2.4 Input/output interface signal address

The input signal address on the I/O unit is X9 ~ X14, with 6 bytes and 48 points in total

The output signal address on the I/O unit is Y8 ~ Y11, with 4 bytes and 32 points

When multiple I/O extended connections are used, the address assignments are the following in turn according to the Ethernet connection order:

The first I/O is the input signal address X9~X14 and the output signal address Y8~Y11;

The second I/O is the input signal address X15~X20 and the output signal address Y12~Y15;

The third I/O is the input signal address X21~X26 and the output signal address Y16~Y19.

1) IOR-04T, IOR-44T input interface address definition

Input 1 (CN66)	Pin	Address	Input (CN71)	Pin	Address
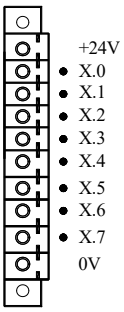	X.0	X9.0	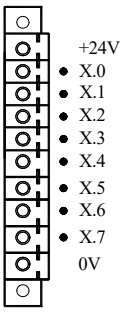	X.0	X12.0
	X.1	X9.1		X.1	X12.1
	X.2	X9.2		X.2	X12.2
	X.3	X9.3		X.3	X12.3
	X.4	X9.4		X.4	X12.4
	X.5	X9.5		X.5	X12.5
	X.6	X9.6		X.6	X12.6
	X.7	X9.7		X.7	X12.7

Input 2 (CN67)	Pin	Address	Input (CN72)	Pin	Address
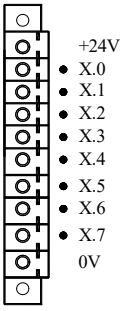	X.0	X10.0	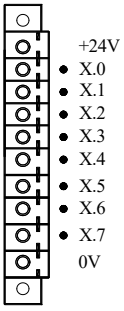	X.0	X13.0
	X.1	X10.1		X.1	X13.1
	X.2	X10.2		X.2	X13.2
	X.3	X10.3		X.3	X13.3
	X.4	X10.4		X.4	X13.4
	X.5	X10.5		X.5	X13.5
	X.6	X10.6		X.6	X13.6
	X.7	X10.7		X.7	X13.7

Input 3 (CN68)	Pin	Address	Input (CN73)	Pin	Address
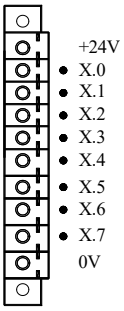	X.0	X11.0	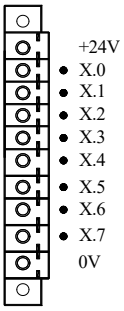	X.0	X14.0
	X.1	X11.1		X.1	X14.1
	X.2	X11.2		X.2	X14.2
	X.3	X11.3		X.3	X14.3
	X.4	X11.4		X.4	X14.4
	X.5	X11.5		X.5	X14.5
	X.6	X11.6		X.6	X14.6
	X.7	X11.7		X.7	X14.7

2) IORL-04T, IOR-44T output interface address definition

Output 1 (CN69)	Pin	Address	Output 3 (CN74)	Pin	Address
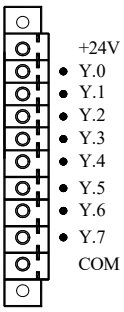	Y.0	Y8.0	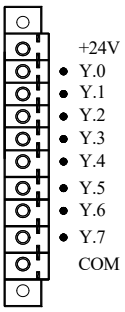	Y.0	Y10.0
	Y.1	Y8.1		Y.1	Y10.1
	Y.2	Y8.2		Y.2	Y10.2
	Y.3	Y8.3		Y.3	Y10.3
	Y.4	Y8.4		Y.4	Y10.4
	Y.5	Y8.5		Y.5	Y10.5
	Y.6	Y8.6		Y.6	Y10.6
	Y.7	Y8.7		Y.7	Y10.7

Output 2 (CN70)	Pin	Address	Output 4 (CN75)	Pin	Address
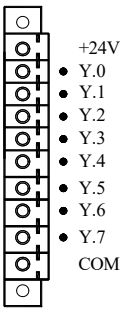	Y.0	Y9.0	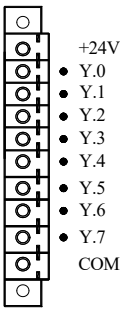	Y.0	Y11.0
	Y.1	Y9.1		Y.1	Y11.1
	Y.2	Y9.2		Y.2	Y11.2
	Y.3	Y9.3		Y.3	Y11.3
	Y.4	Y9.4		Y.4	Y11.4
	Y.5	Y9.5		Y.5	Y11.5
	Y.6	Y9.6		Y.6	Y11.6
	Y.7	Y9.7		Y.7	Y11.7

The input signal can be extended to X119 at maximum, while the output signal is can be extended to Y119 at maximum.

5.2.5 Input signal circuit connection

An input signal refers to a signal from machine to I/O unit, and when the input signal is connected with +24 V, the input is valid; when this input signal is disconnected from +24 V, the input is invalid.

There are two ways for external input of the input signal: one uses a contact switch for input, and the signal in this way comes from the machine-side keys, limit switches, contacts of relays, etc., with the connection as shown in the following figure:

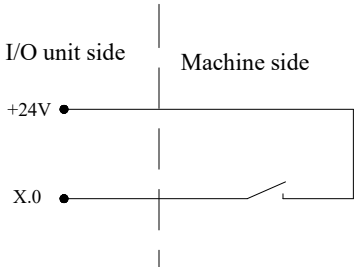

The other uses a contactless switch (transistor) input, with the connection as shown in the following figure:

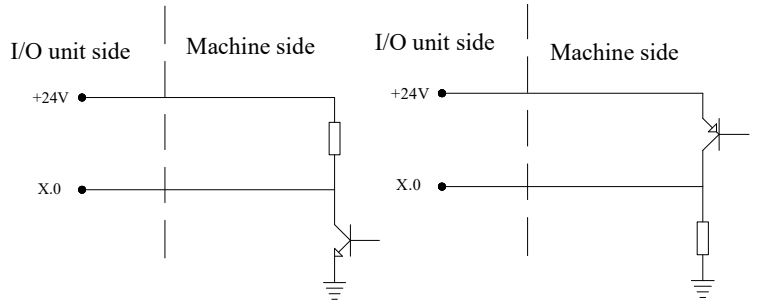

NPN type PNP type

5.2.6 Output signal circuit connection

The output signal is used to drive the relay and indicator on the machine side. When the output signal is connected with 0V, the output function is valid; the output function is invalid when it is disconnected from 0V.

There are 32 output signal points in total. They are all ULN280-3 outputs, with a maximum current of 200 mA for each.

- Drive light emitting diode

The output signal is used to drive the light emitting diodes and requires a resistor in series to limit the current flowing through the light emitting diodes (typically about 10 mA). As shown in the following figure:

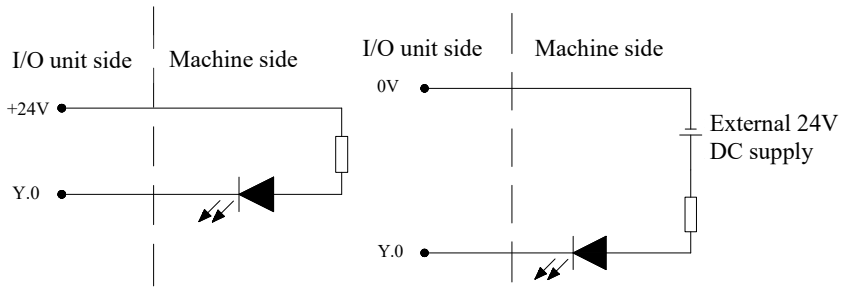

No external power supply Use external DC power supply

- Drive filament indicator

The output signal is used to drive the filament indicator, and a preheating resistor is required to reduce the current impact in breakover. The preheating resistor is sized so that the indicator is not illuminated, as shown in the following figure:

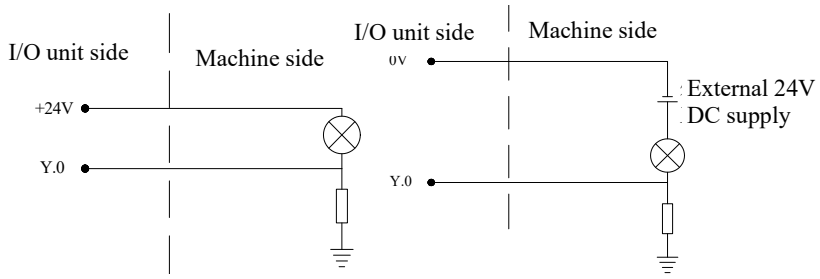

No external power supply Use external DC power supply

- Drive inductive load (e.g. relay)

The output signal is used to drive the inductive load, in which case a free-wheeling diode needs to be connected near the coil to protect the output circuit and reduce interference.

As shown in the following figure:

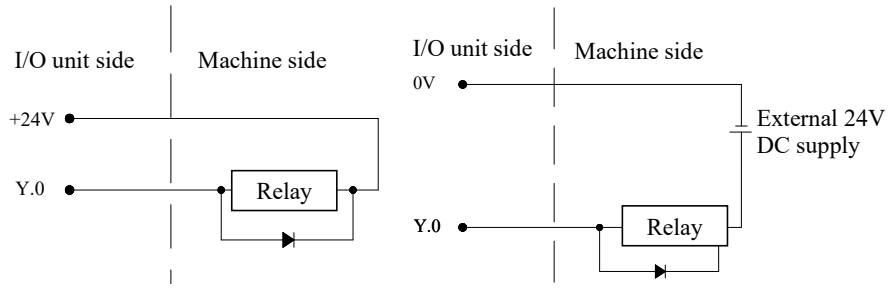

No external power supply　　Use external DC

5.2.7 COM interface of output signal

COM, COM0 and COM1 terminals in the output interface can be used when the output signal drives an inductive load and the inductive load does not have a free-wheeling diode and act as a free-wheeling diode, as shown in the following figure:

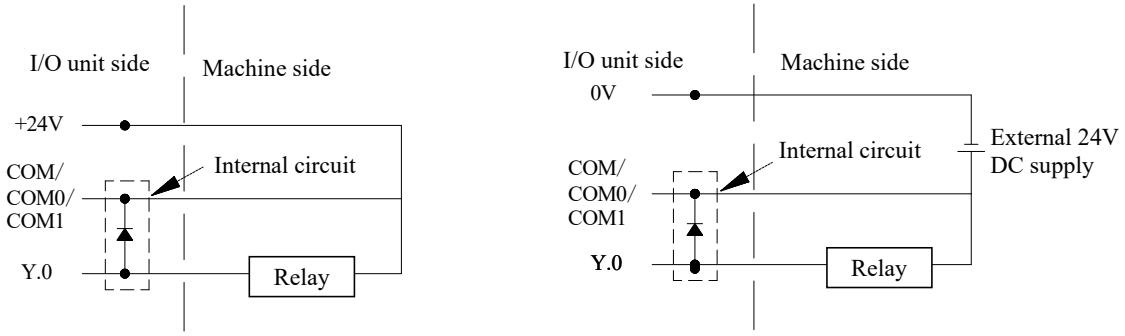

No external power supply　　Use external DC power supply

Note: COM, COM0, COM1 terminals must not be shorted to 0V.

5.3 IOR-21F, IOR-44F interface

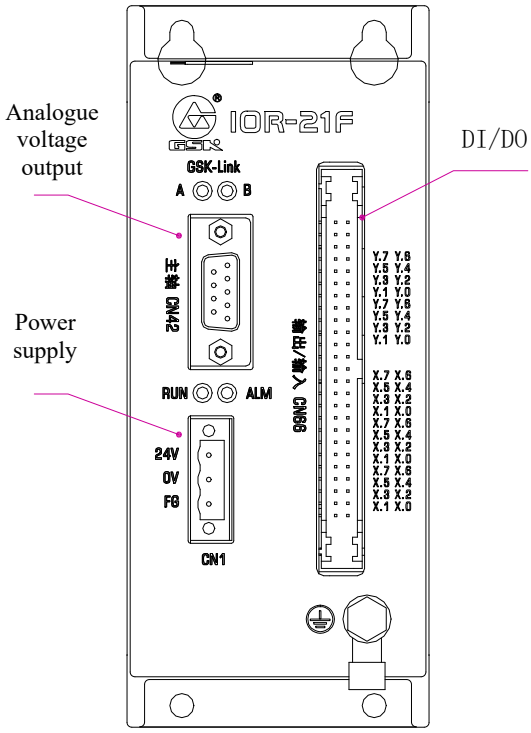

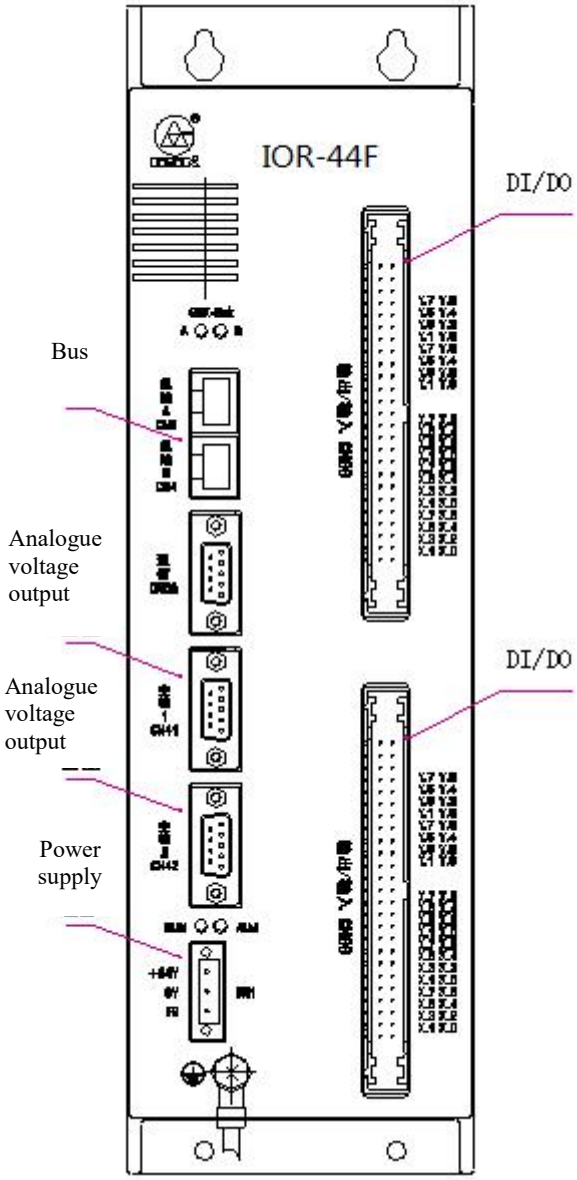

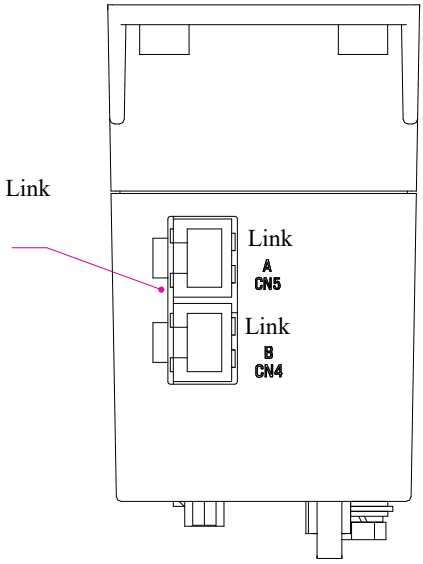

IOR-21F interface

5.3.1 Industrial Ethernet bus interface CN5, CN4

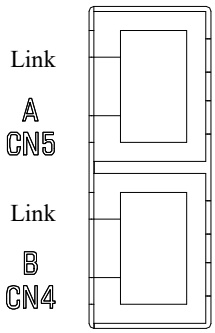

The IOR series I/O units are connected to the CNC system through the GSKLINK bus interface. The GSKLink bus communication wiring is shown in the following figure:

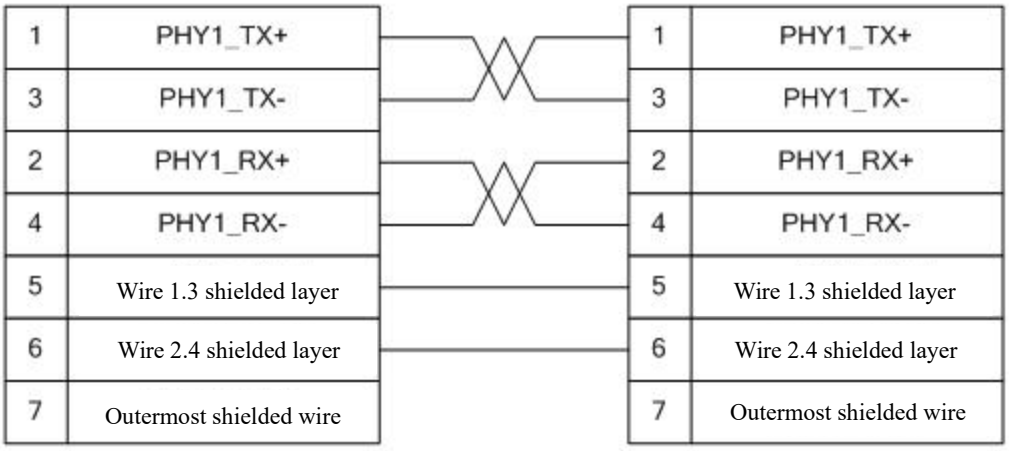

5.3.2 Analog output interface CN42

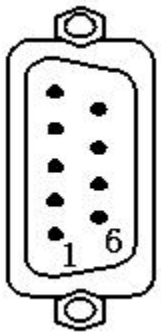

Definition of signals	Description of signals
1: GND	Analog voltage output ground
2: IO-AOT1	0~+ 10V analog voltage output
4: GND	Analog voltage output ground
5: IO-AOT0	0~+10 V second analog voltage output

5.3.3 Digital input and output signal interface CN66

The I/O point is a single 50PIN horn socket with valid high-level output.

CN66 plug pin assignment

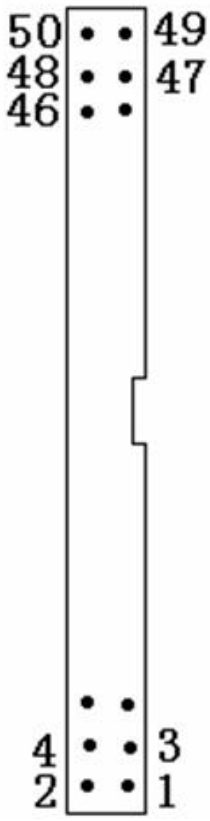

Input/Output 1	1: 0V 2: 24V 3~26: X100.0~X102.7 27~30: Empty 31~46: Y100~Y101.7 47~50: VCOM
Input/Output 2	1: 0V 2: 24V 3~26: X103.0~X105.7 27~30: Empty 31~46: Y102.0~Y103.7 47~50: VCOM

● Connection of input signals

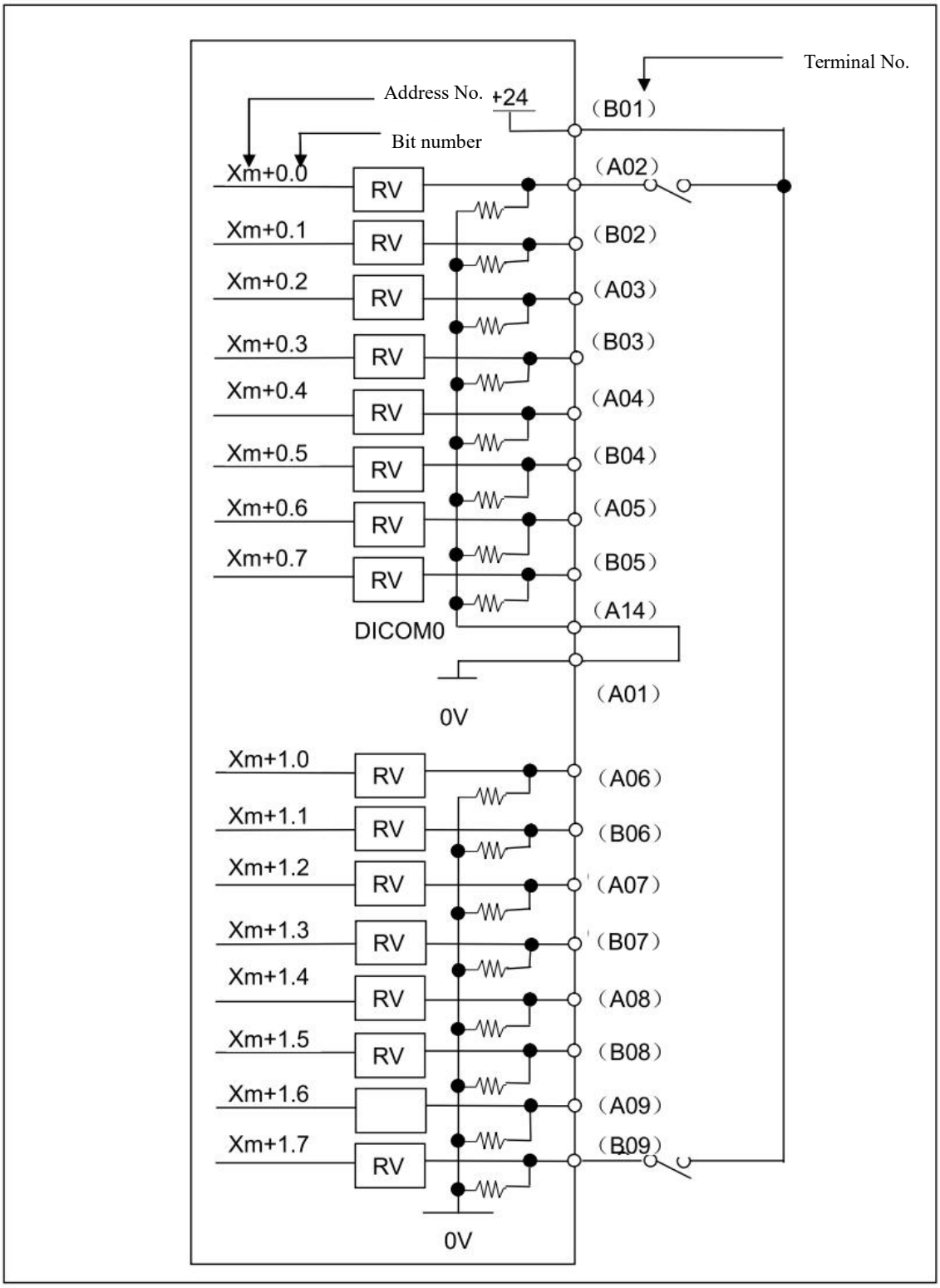

Diagram of Input Signal Connection

Wiring application for a drive relay:

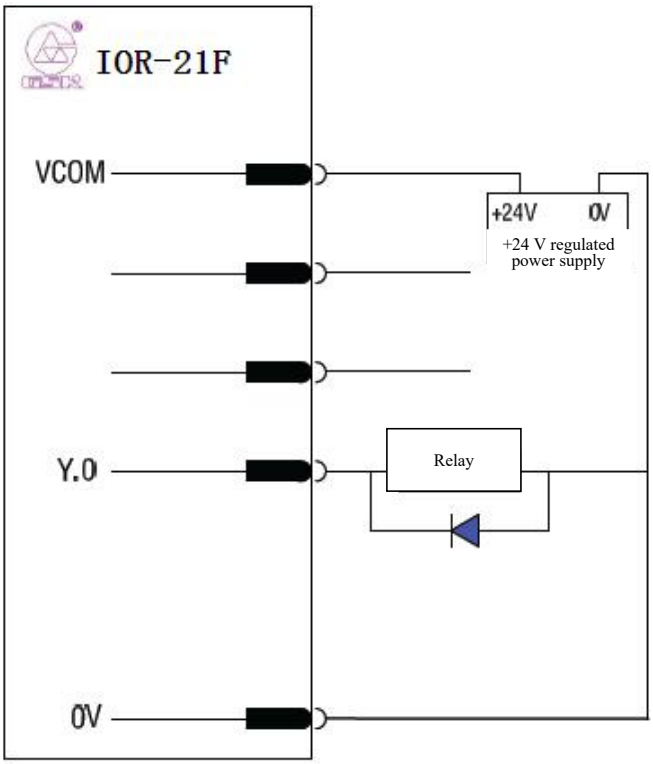

Diagram of Output Signal Connection

Notes:

"VCOM" must be connected to an external power supply + 24V, and the external power supply 0V is connected to the I/O unit 0V before the IOR-21F can be output; Otherwise there is no output;

In addition, IOL-21F can be adapted to the I/O unit splitter "MCT-07" of our company for adapting to the horn socket, so as to facilitate wiring:

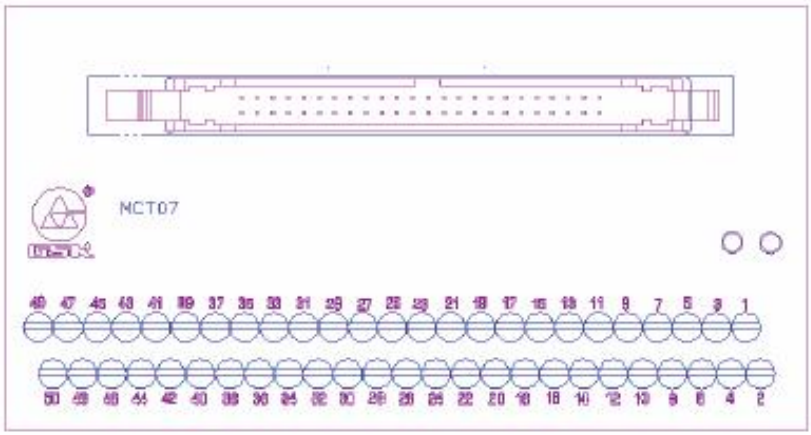

Notes:

1. When GSK-Link communication fails or I/O unit power supply is disconnected, all output signals of I/O unit are disconnected, thus attention shall be paid to the design of machine circuit and PLC program.

2. The state of the unprocessed address output in the currently running PLC program will not be refreshed.

Chapter 6 PC Communication Line

6.1 System connects PC Ethernet port communication

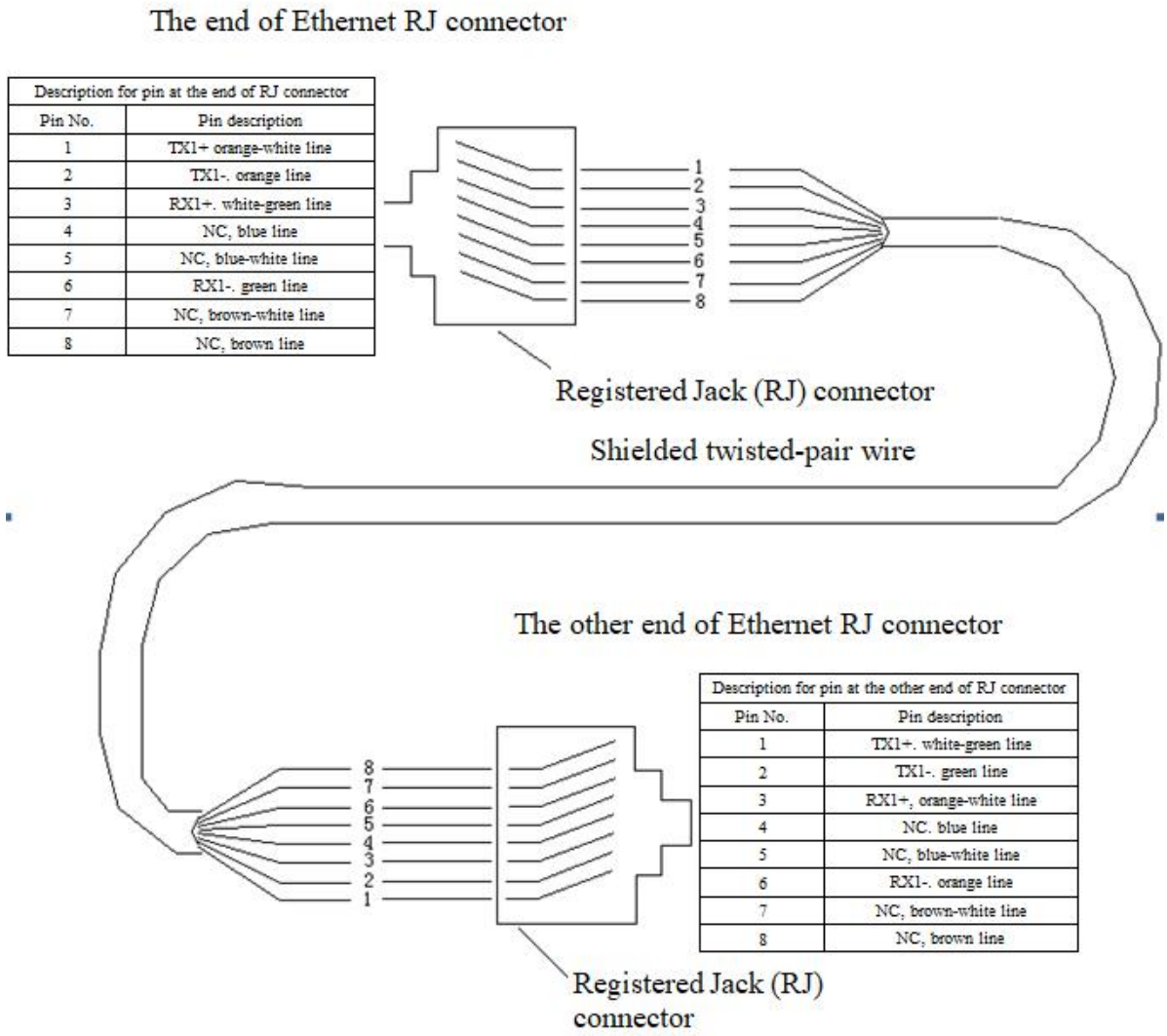

Description for pin at the end of RJ connector	
Pin No.	Pin description
1	TX1+ orange-white line
2	TX1-. orange line
3	RX1+. white-green line
4	NC, blue line
5	NC, blue-white line
6	RX1-. green line
7	NC, brown-white line
8	NC, brown line

Description for pin at the other end of RJ connector	
Pin No.	Pin description
1	TX1+. white-green line
2	TX1-. green line
3	RX1+, orange-white line
4	NC. blue line
5	NC, blue-white line
6	RX1-. orange line
7	NC, brown-white line
8	NC, brown line

Diagram of System Connecting PC Ethernet Port Communication

Chapter 7 MPG Connecting Line

7.1 The external MPG unit is connected with the host chassis

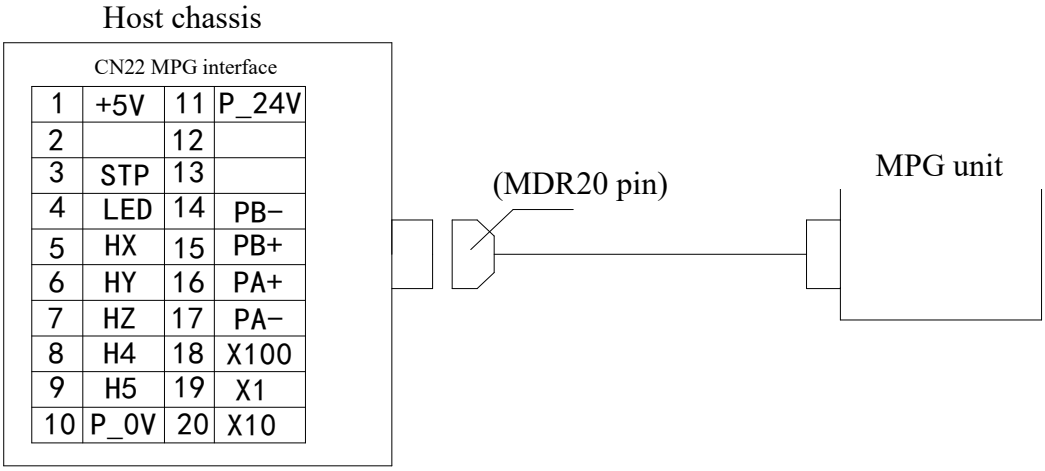

Connection Diagram of External MPG Unit with Host Chassis

7.2 Connection of external MPG signal wire

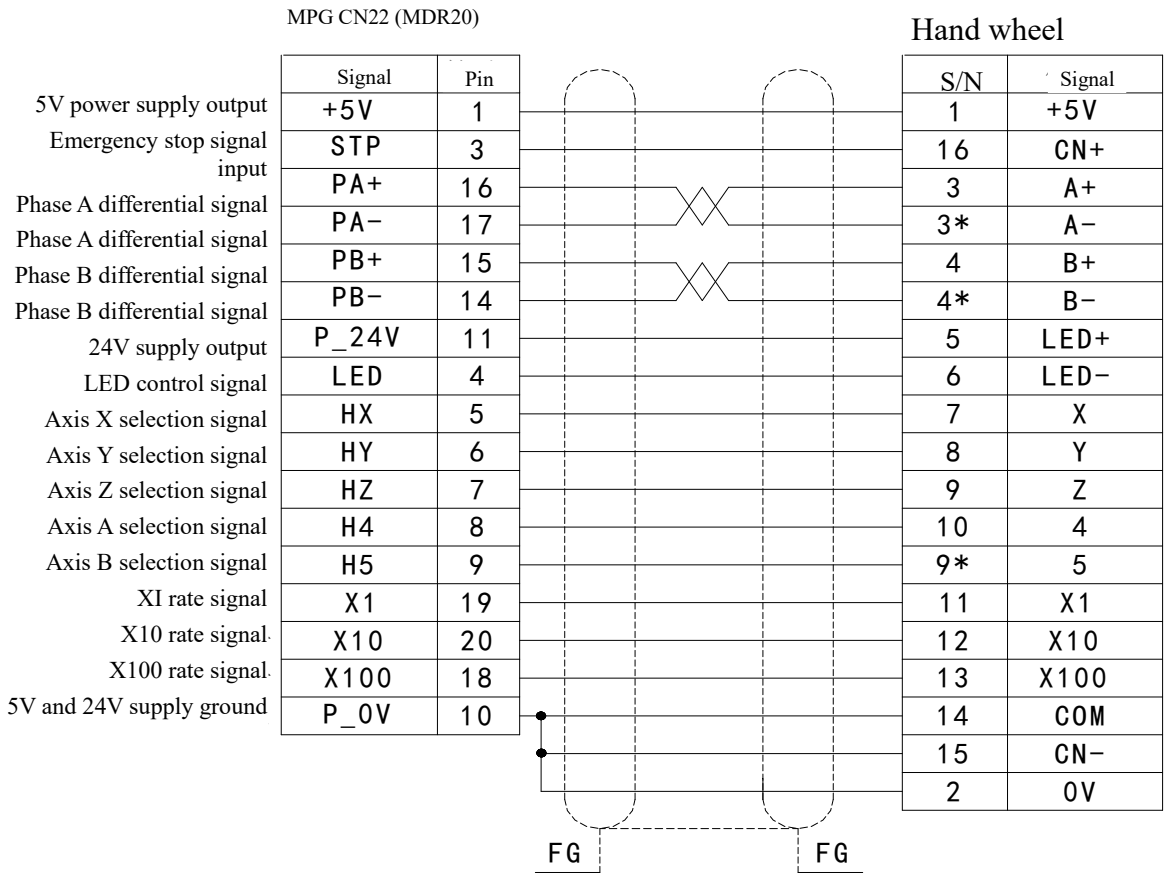

Connection Diagram of External MPG Signal Wire

7.2.1 Signal interface circuit

1. HA+, HA-, HB+ and HB- are the input signals of Phase A and Phase B of MPG respectively:

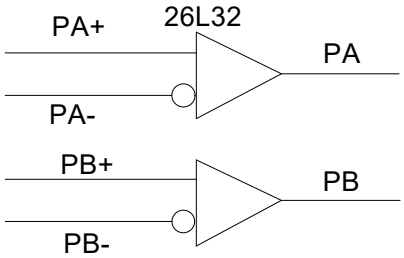

MPG signal circuit

2. MPG input signals X1, X10, X100, HX, HY, HZ, H4, H5, STP. The internal interface circuit is as follows:

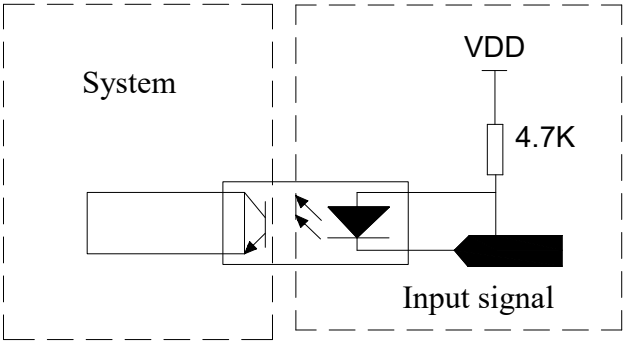

MPG input interface circuit

7.2.2 Definition of MPG signal contact

Definition of MPG signal contact

Signal name	PLC address	Function of signals	I / O
HX	X120.7	Axis X selection signal input	I
HY	X120.6	Axis Y selection signal input	I
HZ	X120.5	Axis Z selection signal input	I
H4	X120.4	Axis 4 selection signal input	I
H5	X120.3	Axis 5 selection signal input	I
X1	X120.2	X1 rate signal input	I
X10	X120.1	X10 rate signal input	I
X100	X120.0	X100 rate signal input	I
STP	X121.0	Emergency stop signal input	I
LED	Y120.0	LED lamp output	O

Chapter 8 Operation anel signal wire

8.1 Operation panel connection

The host chassis of GSK 25i CNC System communicates with the operation panel through RS485 serial interface.

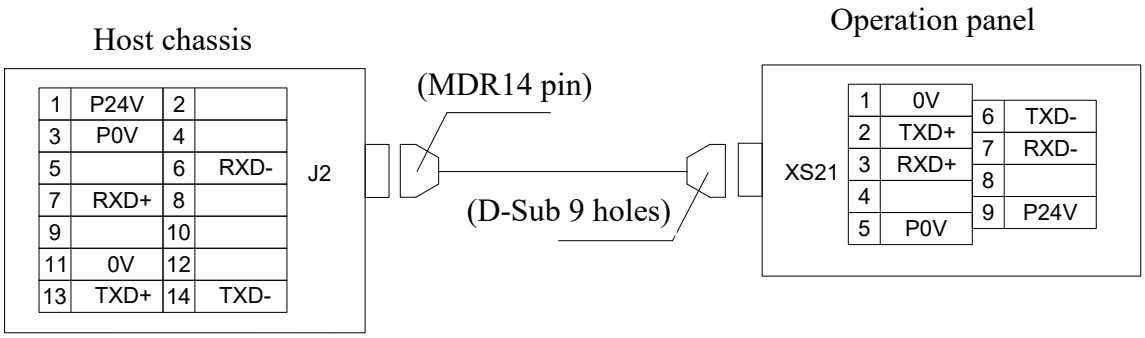

Connection Diagram of Host Chassis with Operation Panel

8.2 Connection of operation panel cable

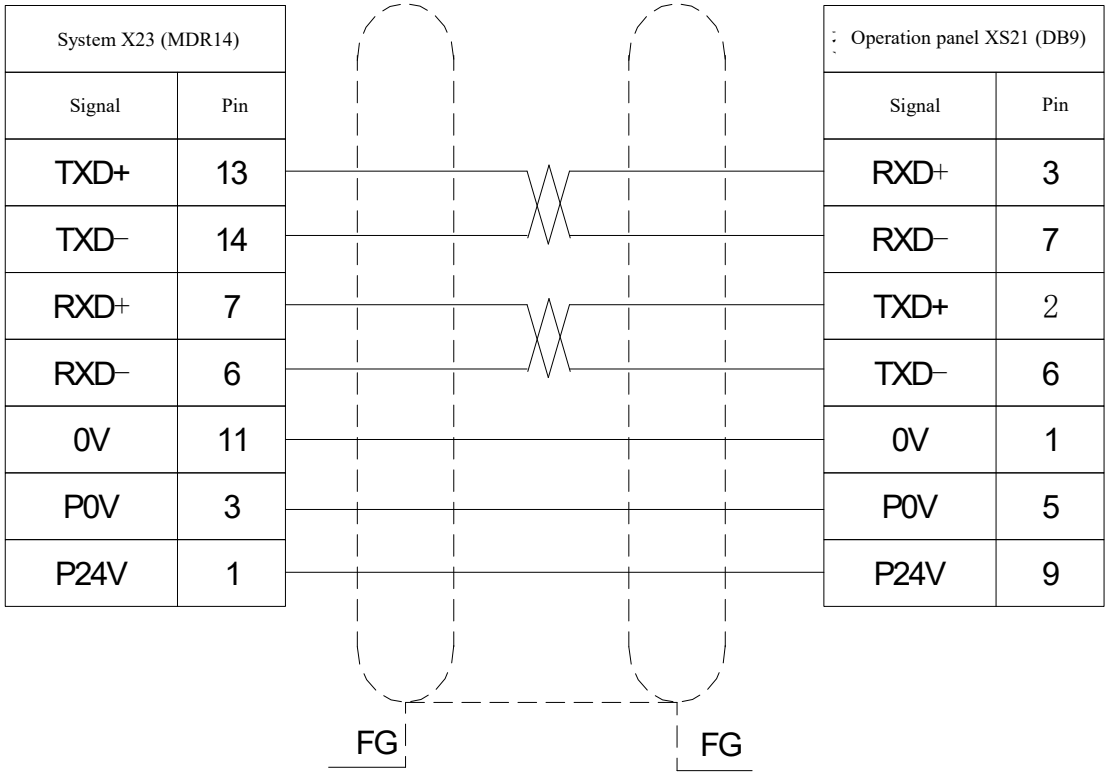

Connection Diagram of Operation Panel Cable

Chapter 9 Connection of Ethernet Communication Wire

9.1 Ethernet communication connection for GSK25iMc system

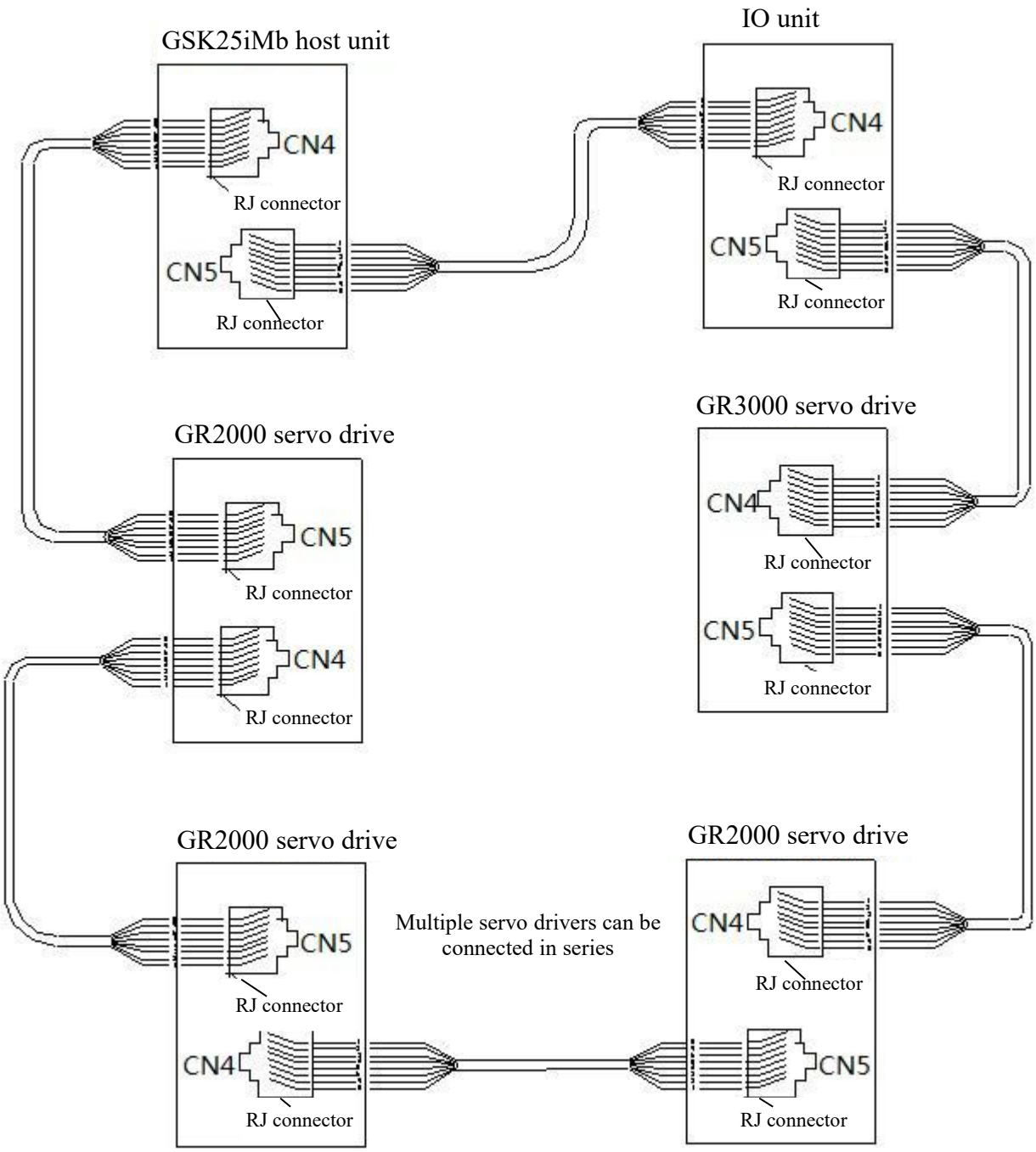

Schematic Diagram of GSK25iMc System Ethernet Communication Wire Connection

9.2 Ethernet cable connection

Connection mode 1:

The end of Ethernet RJ connector

Description for pin at the end of RJ connector	
Pin No.	Pin description
1	TX1+ orange-white line
2	TX1-. orange line
3	RX1+. white-green line
4	NC, blue line
5	NC, blue-white line
6	RX1-. green line
7	NC, brown-white line
8	NC, brown line

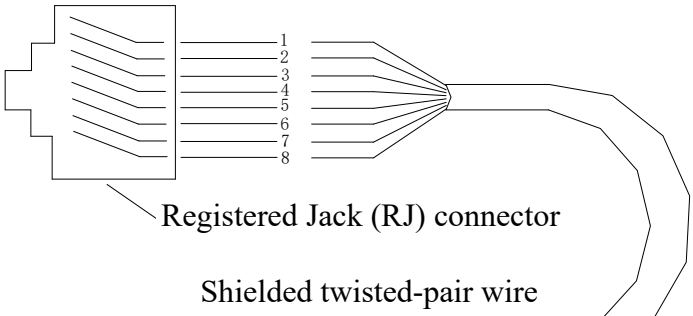

Shielded twisted-pair wire

The other end of Ethernet RJ connector

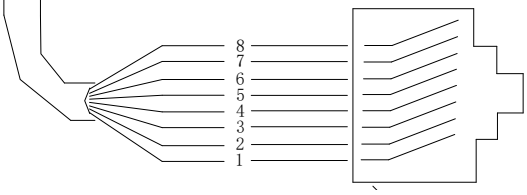

Registered Jack (RJ) connector

Description for pin at the other end of RJ connector	
Pin No.	Pin description
1	TX1+. white-green line
2	TX1-. green line
3	RX1+, orange-white line
4	NC. blue line
5	NC, blue-white line
6	RX1-. orange line
7	NC, brown-white line
8	NC, brown line

Connection mode 2:

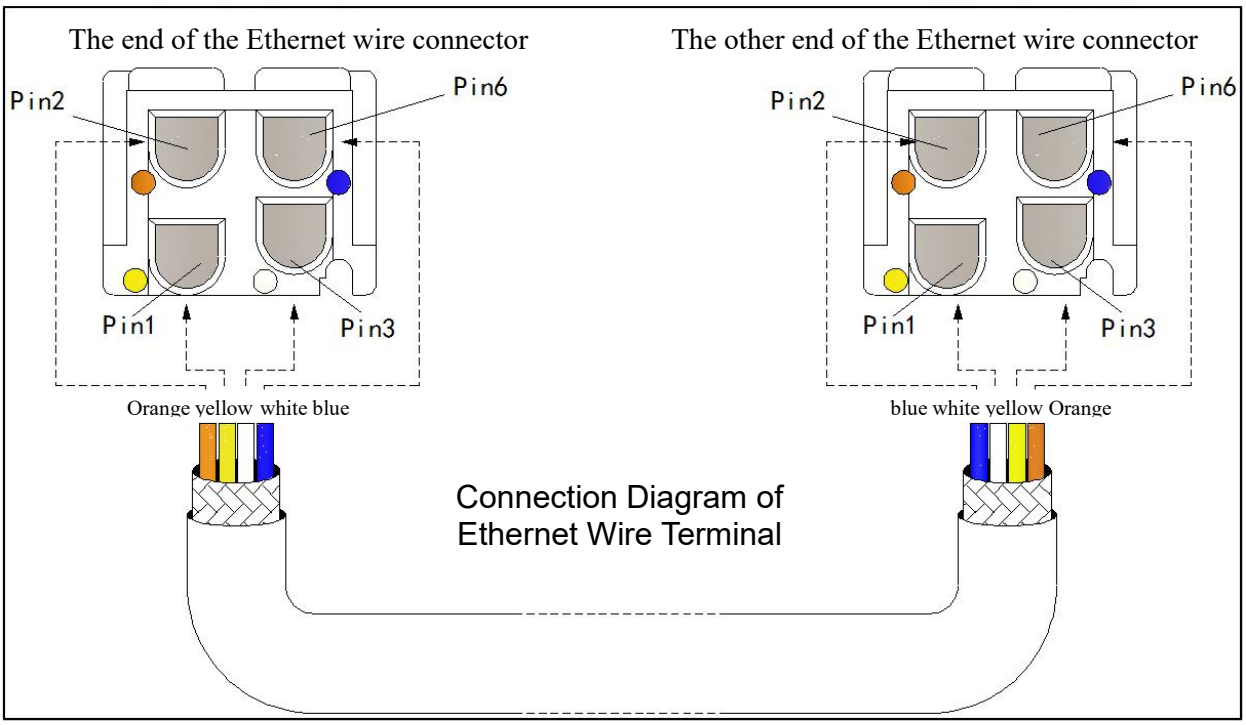

Chapter 10 Spindle servo signal wire Provided

10.1 Spindle driver connection

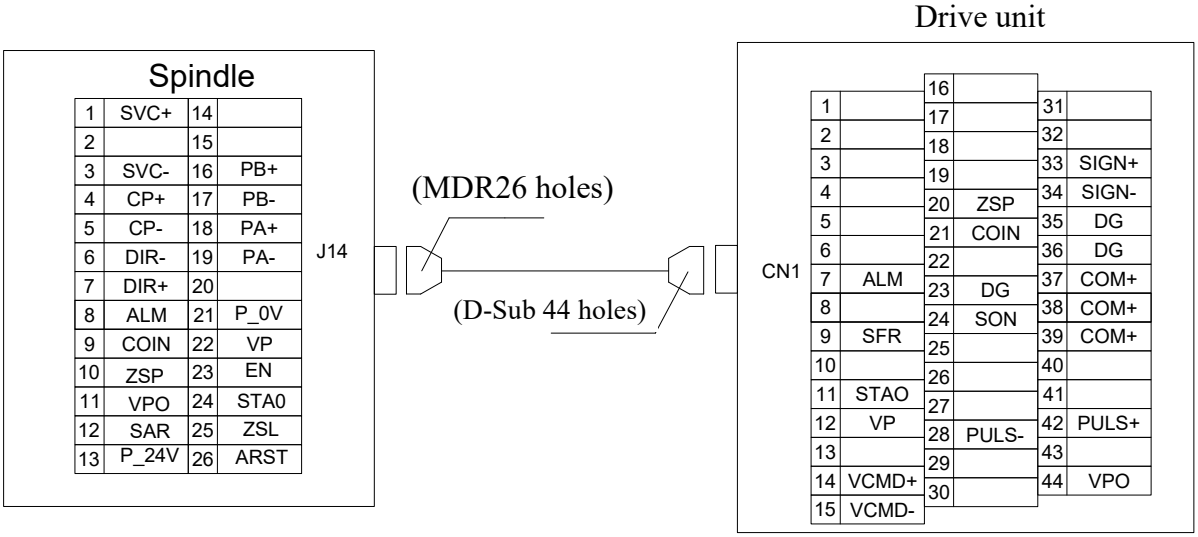

10.1.1 Connection of DAP03 spindle drive cable

	Spindle J14 (MDR26) Signal	Pin	DAPO03 driver (DB44) Signal	Pin
Pulse differential signal	CP+	4	PLUS+	42
Pulse differential signal	CP-	5	PLUS-	28
Direction differential signal	DIR+	7	SIGN+	33
Direction differential signal	DIR-	6	SIGN-	34
Analog command -	SVC-	3	VCMD-	15
Analog command +	SVC+	1	VCMD+	14
Alarm input	ALM	8	ALM	7
Positioning completion	COIN	9	COIN	21
Zero speed state	ZSP	10	ZSP	20
Speed/position state	VPO	11	VPO	44
Speed arrival	SAR	12	SAR	5
24V power supply	P_24V	13	COM+	37,38,39
24V ground	P_0V	21	DG	23,35,36
Motor encoder Phase B	PB+	16	PB+	17
Motor encoder Phase B	PB-	17	PB-	2
Motor encoder Phase A	PA+	18	PA+	16
Motor encoder Phase A	PA-	19	PA-	1
Speed position switch	VP	22	VP	12
Alarm clear	ARST	26	ARST	8
Zero speed clamp	ZSL	25	ZSL	27
Positioning start	STAO	24	STAO	11
Enabling signal	EN	23	SON	24
			SFR	9

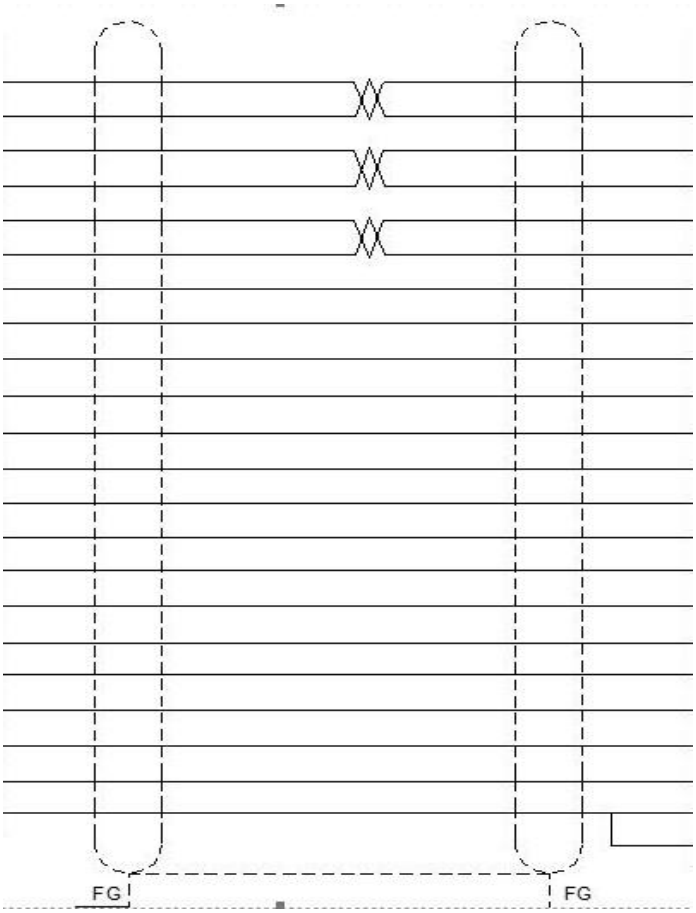

10.1.2 Equipped with GS × × × ×-NP2 spindle drive cable

	GSK25i X21 (MDR26) Signal	Pin	GS driver (DB44) Signal	Pin
Pulse differential signal	CP+	4	PLUS+	2
Pulse differential signal	CP-	5	PLUS-	17
Direction differential signal	DIR+	7	SIGN+	1
Direction differential signal	DIR-	6	SIGN-	16
Analog command -	SVC-	3	VCMD-	14
Analog command +	SVC+	1	VCMD+	44
Alarm input	ALM	8	ALM	9
Positioning completion	COIN	9	COIN	12
Zero speed state	ZSP	10	ZSP	42
Speed/position state	VPO	11	VPO	10
Speed arrival	SAR	12	SAR	41
24V power supply	P_24V	13	COM+	39
24V ground	P_0V	21	COM-	24
			ALM-	25
			VPO	26
			COIN-	28
Motor encoder Phase B	PB+	16	PB+	18
Motor encoder Phase B	PB-	17	PB-	3
Motor encoder Phase A	PA+	18	PA+	19
Motor encoder Phase A	PA-	19	PA-	4
Position feedback output	BNCPZ+		PZO+	31
Position feedback output	BNCPZ-		PZO-	32
Speed position switch	VP	22	VP	38
Alarm clear	ARST	26	ARST	36
Zero speed clamp	ZSL	25	ZSL	37
Positioning start	STAO	24	STAO	8
Enabling signal	EN	23	SON	23
			SFR	20

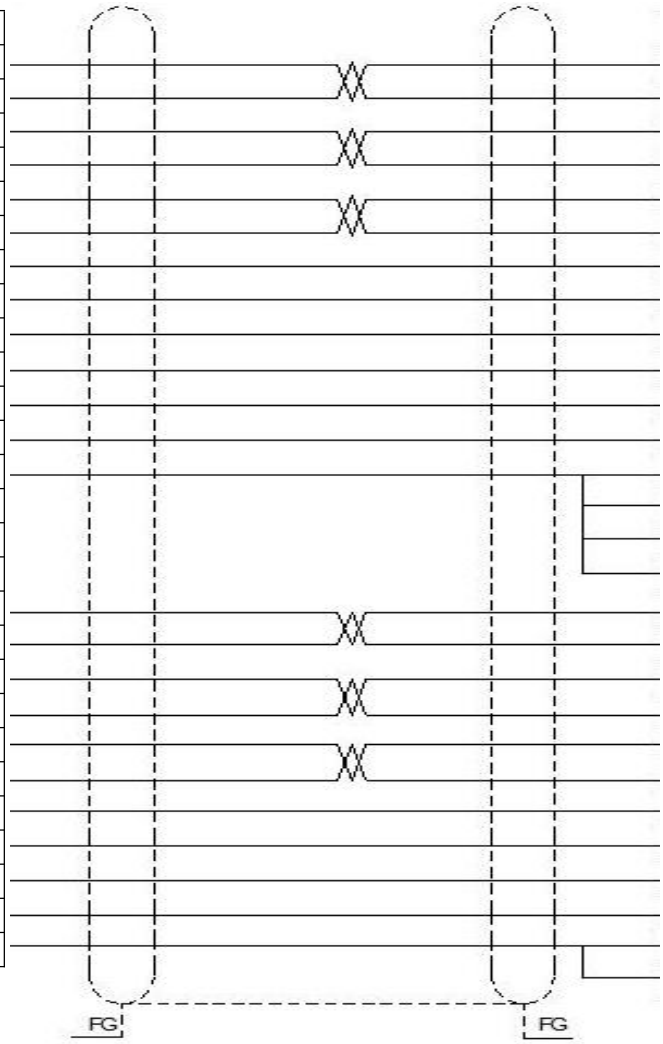

10.1.3 Signal interface circuit

1. Encoder signal input: PA+/PA-, PB+/PB- are the differential input signals of Phase A and Phase B of the encoder respectively, with the interface circuit shown in the following figure:

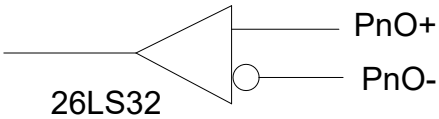

2. Spindle I/O input signals: ALM, COIN, ZSP, VPO, SAR. The interface circuit is shown in the following figure:

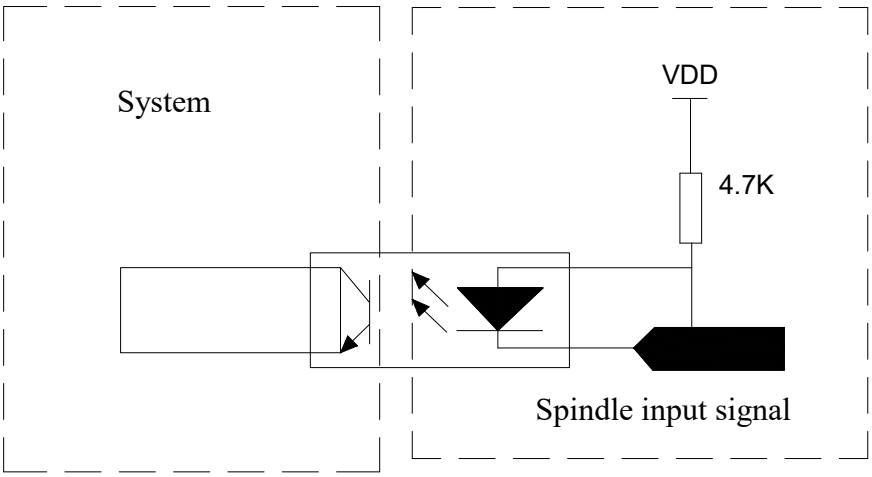

3. Spindle I/O output signals: ARST, ZSL, EN, STA0, VP. The interface circuit is shown in the following figure:

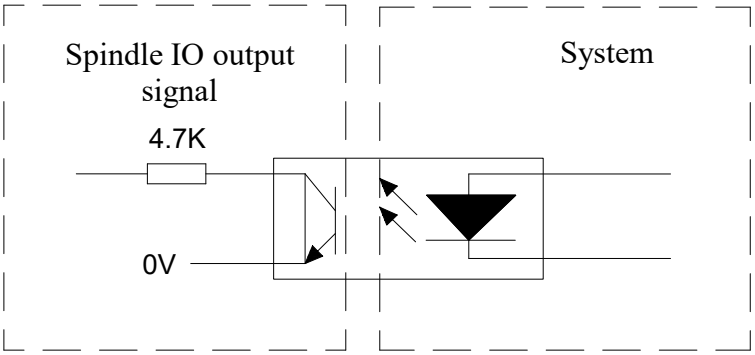

4. Position and direction pulse output signals: CO+/CP-, DIR+/DIR-. The interface circuit is shown in the following figure:

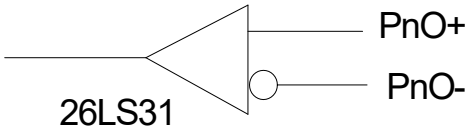

5. Analog command signal: SVC-/SVC+. The interface circuit is shown as follows:

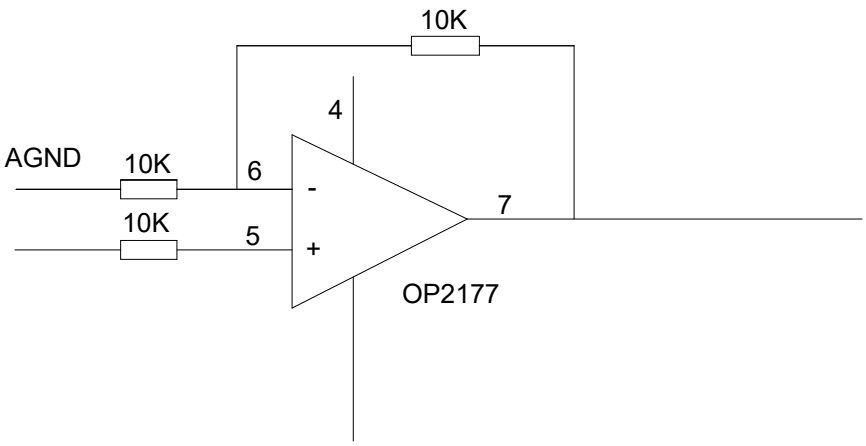

SVC signal circuit

Chapter 11 Spindle Frequency Converter Connecting Line Provided

11.1 Connection of spindle frequency converter

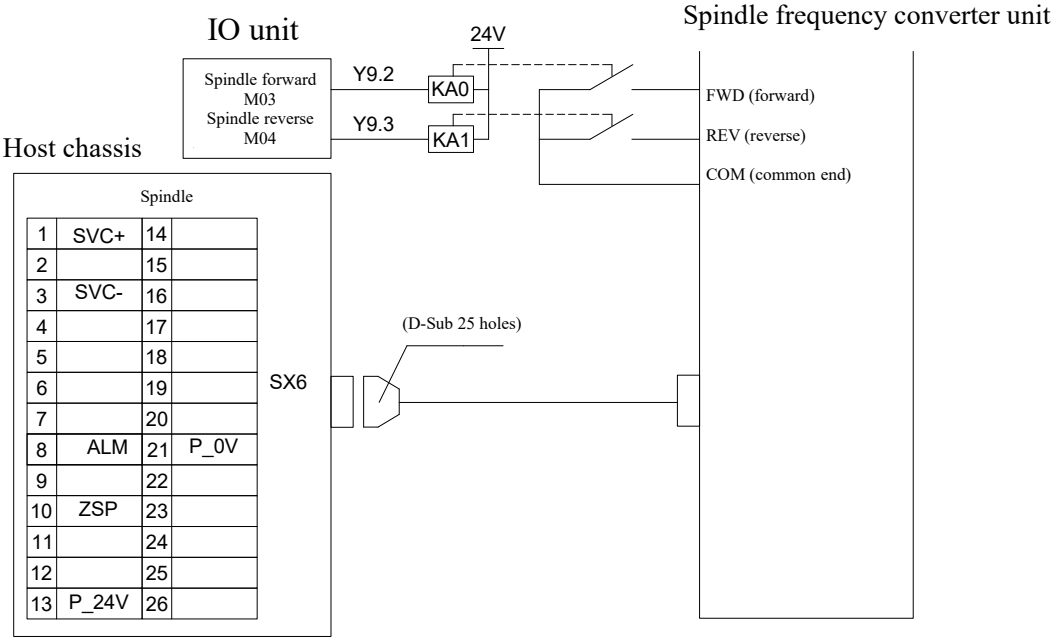

11.2 Connection of spindle frequency converter cable

Mode 1:

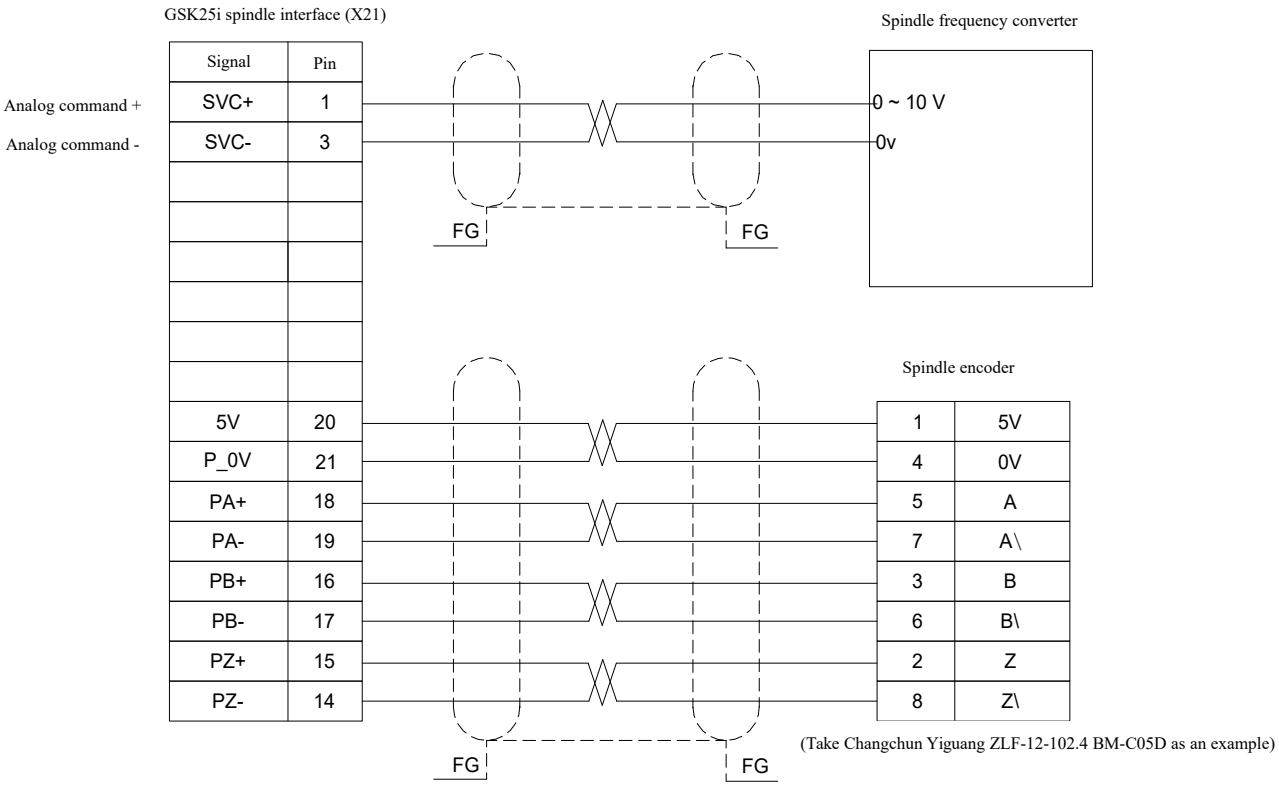

Mode 2:

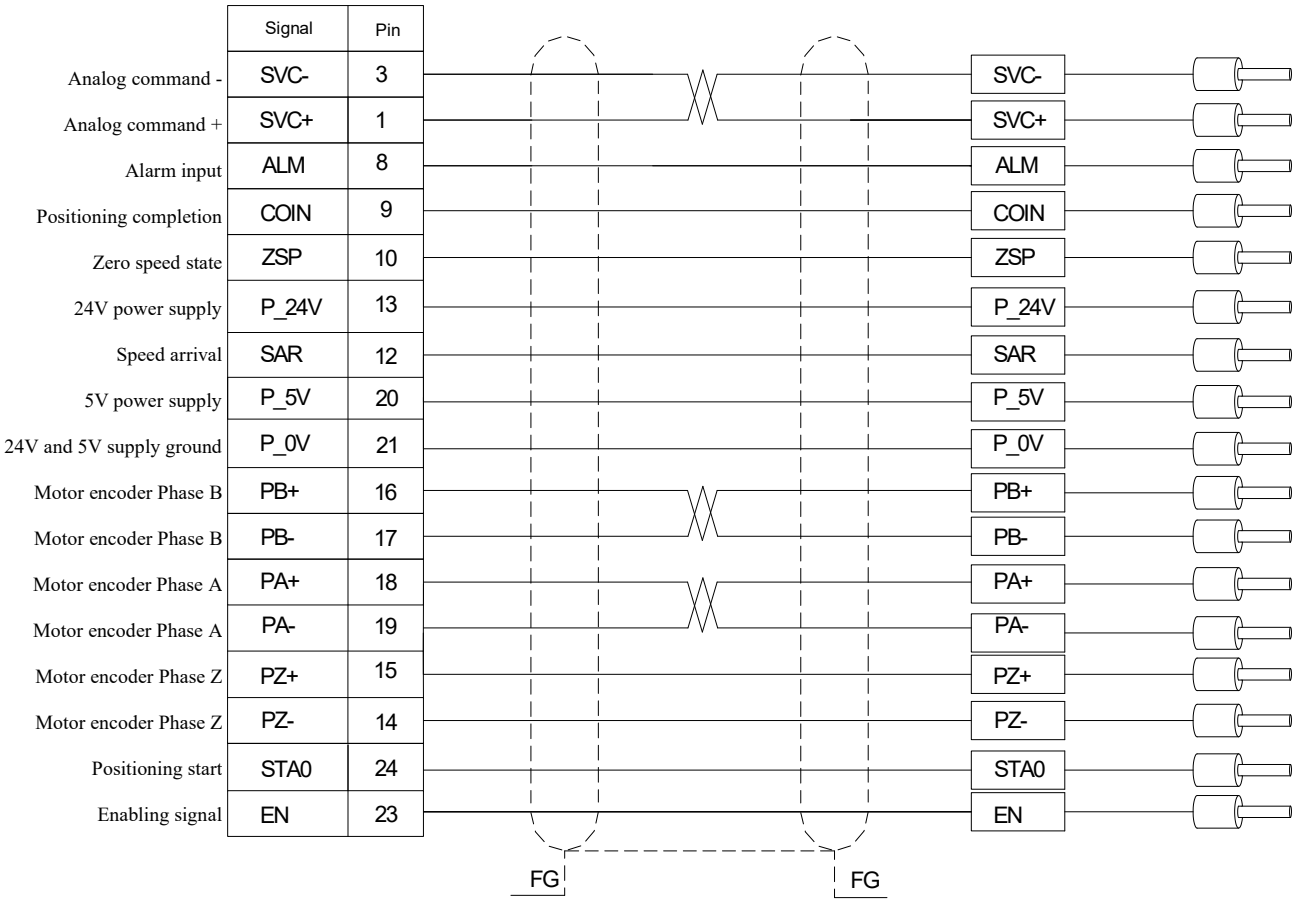
Signal
Pin
Analog command -
SVC-
3
Analog command +
SVC+
1
Alarm input
ALM
8
Positioning completion
COIN
9
Zero speed state
ZSP
10
24V power supply
P_24V
13
Speed arrival
SAR
12
5V power supply
P_5V
20
24V and 5V supply ground
P_0V
21
Motor encoder Phase B
PB+
16
Motor encoder Phase B
PB-
17
Motor encoder Phase A
PA+
18
Motor encoder Phase A
PA-
19
Motor encoder Phase Z
PZ+
15
Motor encoder Phase Z
PZ-
14
Positioning start
STA0
24
Enabling signal
EN
23
SVC-
SVC+
ALM
COIN
ZSP
P_24V
SAR
P_5V
P_0V
PB+
PB-
PA+
PA-
PZ+
PZ-
STA0
EN
FG
FG

Chapter 12 Connection Method for System Power-on and Vertical Axis Brake Control

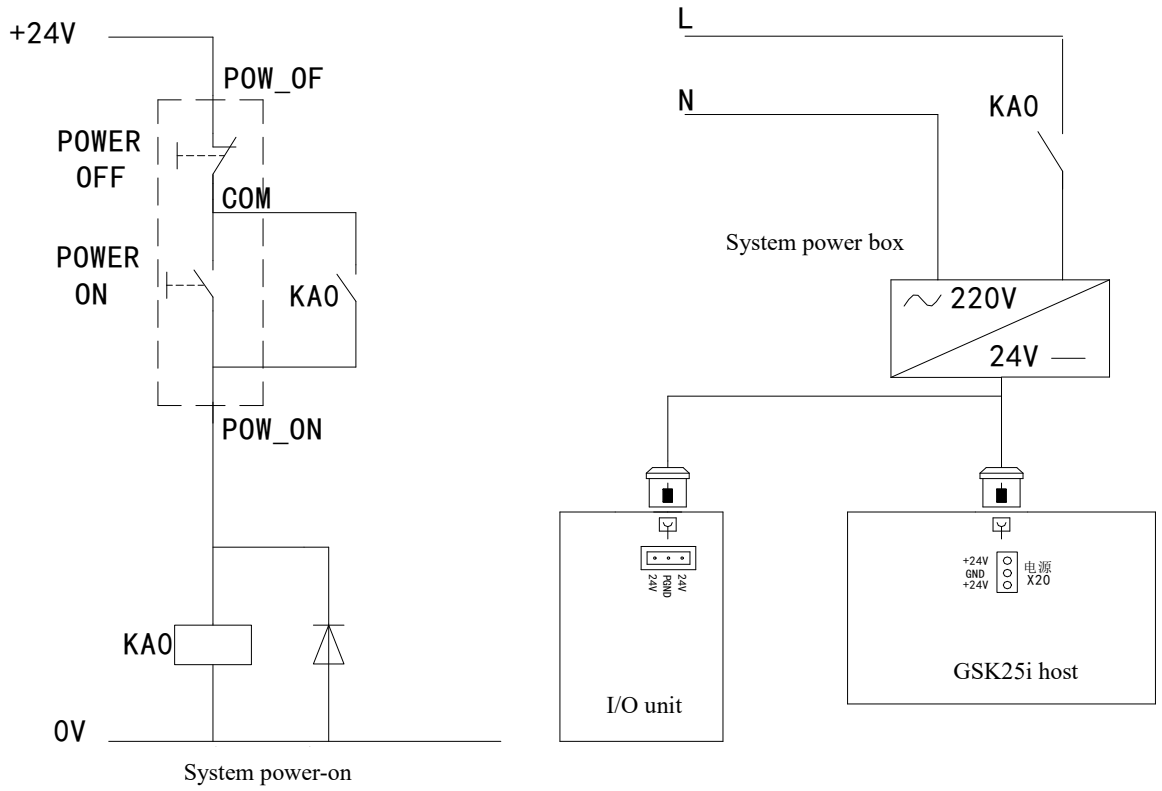

System power-on control

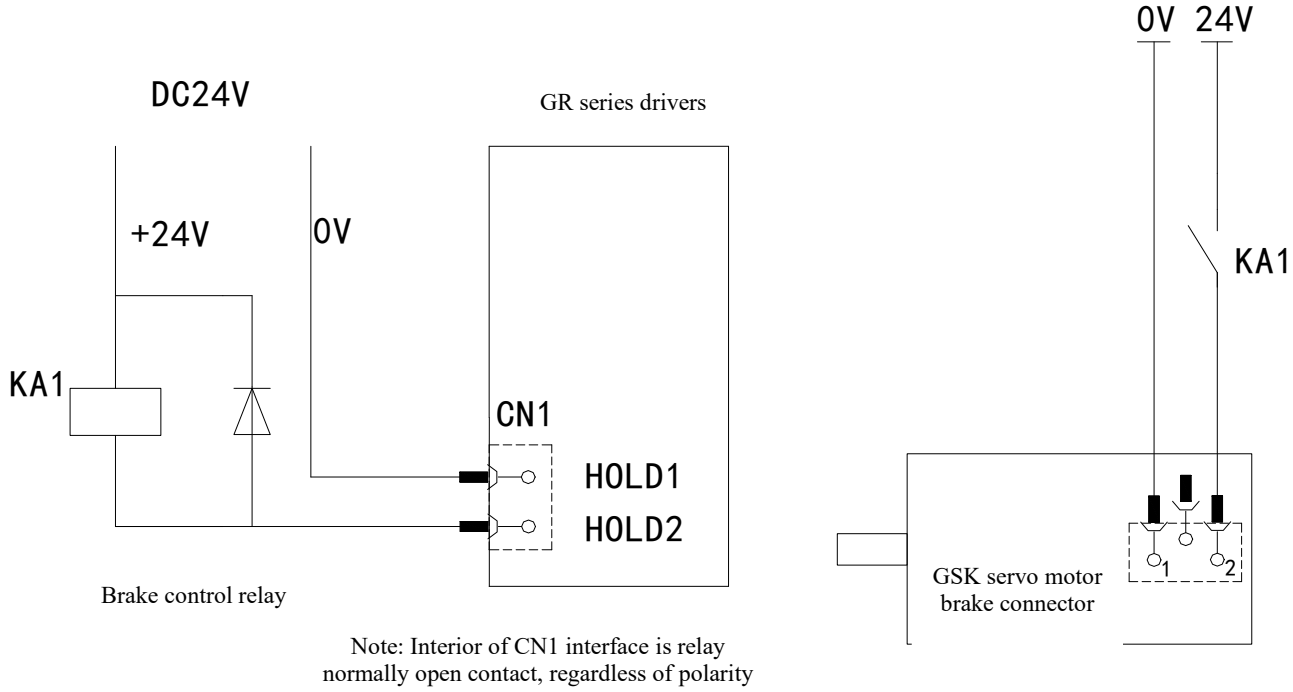

vertical axis brake control

Volume 2 Commissioning

Chapter 1 Parameter Configuration

1.1 Precautions for CNC parameter setting

1. In order to ensure the system data security, the system sets the password authority, and the setting parameters must be in MDI mode, with the corresponding authority.

2. A password at a higher level has all the authorities of a lower password.

3. There are three kinds of parameters: Effective Immediately, Reset Valid and Restart Valid. After modifying the parameters, there will be corresponding prompts.

1.2 Password authority operation

For more information, please refer to Item 6 [Login] Interface Operation, Section 3.3 Setting Page, Chapter 3.

Protection level	Initial password	Authority description	Remarks
0: System manufacturer advanced password		Highest authority, reserved by developer. Clear alarm/operation message.	
1: System manufacturer service password		Used for system manufacturer service, and various data of the system can be modified.	
2: Machine manufacturer	111111	Can modify PLC program, PLC annotation editing and pitch compensation; Start/stop PLC operation; introduce and outgoing PLC and screw complement files; Modify/introduce and issue User Customization Interface Authority.	
3: Installation and commissioning engineer	111111	Can modify parameters and PLC resource data; introduce and issue NC parameter and PLC parameter files.	
4: End user administrator	111111	The administrator can modify the program, tool offset and set various function settings of the interface, workpiece coordinate system values, macro variable values; has authority to modify the programmer password.	
5: Operator 1		End-user administrators authorize the operation authority of the appropriate personnel by means of a bit parameter. The system defaults to Level 7, without entering passwords.	
6: Operator 2			
7: Operator 3			

Note: To modify the login password of the interface, first enter the original password to log in to the corresponding user, and then enter the password to be modified at the corresponding place (entered twice). The passwords of lower-level users can also be modified through advanced users, but users at the same level cannot modify passwords to each other.

Defined by bit parameter authorized by end-user administrator:

Bit	Meaning	Notes
0	G code modification authority	1 Authorized
1	Tool offset modification authority	1 Authorized
2	Wear modification authority	1 Authorized
3	Set modification authority	1 Authorized
4	Coordinate system modification authority	1 Authorized

Bit	Meaning	Notes
5	Macro modification authority	1 Authorized
6	Authority to copy G code to USB flash disk	1 Authorized
7	Reserve	

1.2.1 Authority login and setting

Interface access:

The 偏置 OFT 设定 SET key is pressed to enter the display interface of offset and setting information. There are six sub-interfaces in this interface, namely [Offset], [Setting], [Workpiece System], [Macro Variable], [Pitch] and [Login]. [Login] soft key is pressed or 偏置 OFT 设定 SET is pressed continuously to switch in order until it enters the [Login] interface.

Enter the password to obtain the corresponding permissions authority.

The authority of operator 1, 2 and 3 is managed and authorized by the end-user administrator.

Note: After modifying parameters or PLC operation, [Logout] shall be pressed timely or the system shall be restarted to clear the login state to prevent misoperation.

1.3 Parameter setting operation

1.3.1 Steps for CNC display and setting

1) Press 偏置 OFT 设定 SET on the editing panel to enter the [Login] setting interface and enter the corresponding password.

2) Press the function key 系统 SYSTEM to enter the system interface.

3) Press the soft key [Parameter] to display the parameter interface.

4) Use the following method to move the cursor to the parameter number to be written or displayed. The specific methods are as follows:

a Enter the parameter number and press [Search];

b Move the cursor to the parameter number by using the flip key and , and the direction key , , and .

5) Enter a numeric value with the numeric key and [Enter] key.

6) Perform reset or restart operations to validate the parameters after they are entered, as prompted by the Validity method.

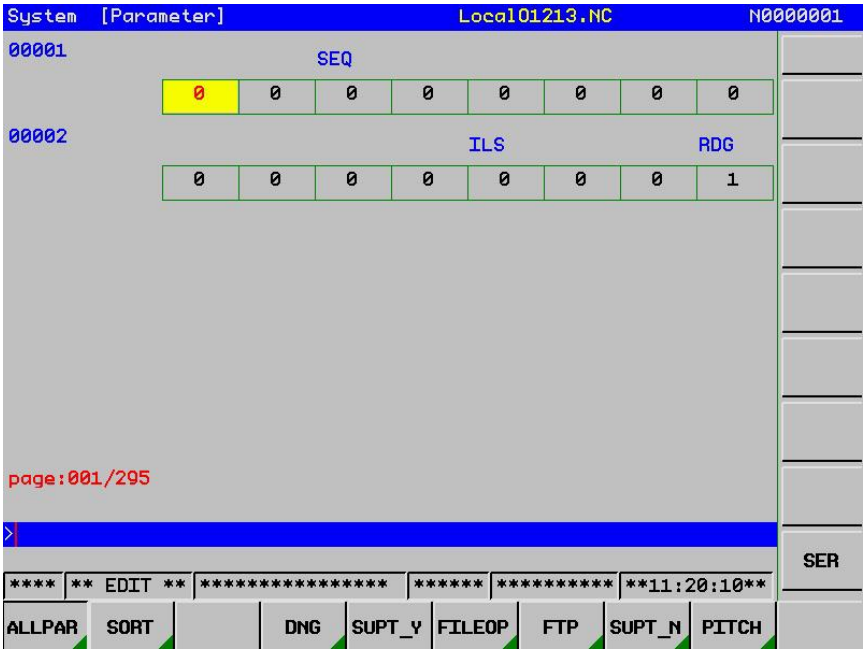

1.3.2 Steps for PLC display and setting

1) Press 偏置 OFT 设定 SET on the editing panel to enter the [Login] setting interface and enter the corresponding password.

2) Press the function key 系统 SYSTEM to enter the system interface.

3) Press the soft key [PLC Parameter] and [Operation] to enter the PLC parameter setting interface.

K parameter:

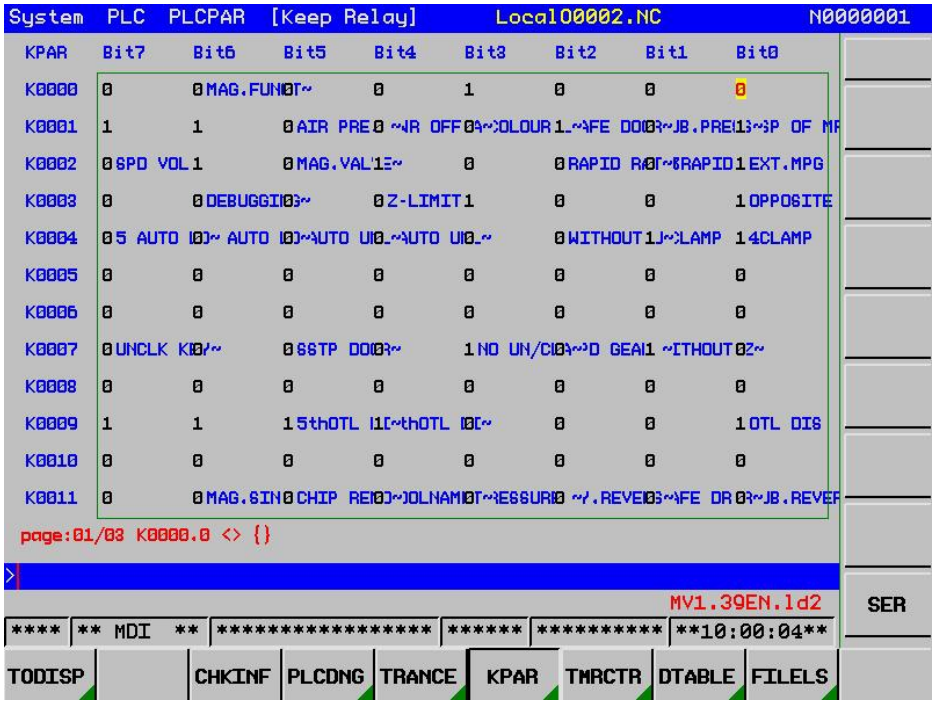

Timer T parameter:

System PLC PLCPAR [Timer] Local00002.NC N0000001

T_No.	Addr	TimerVal		T_No.	Addr	TimerVal	
001	T000	0000000	*48ms	013	T024	0000000	*48ms
002	T002	0000000	*48ms	014	T026	0000000	*48ms
003	T004	0025000	*48ms	015	T028	0000000	*48ms
004	T006	0000833	*48ms	016	T030	0000000	*48ms
005	T008	0000000	*48ms	017	T032	0000000	*48ms
006	T010	0000000	*48ms	018	T034	0000000	*48ms
007	T012	0000000	*48ms	019	T036	0000000	*48ms
008	T014	0000000	*48ms	020	T038	0000000	*48ms
009	T016	0000000	*48ms	021	T040	0000000	*8ms
010	T018	0000000	*48ms	022	T042	0000000	*8ms
011	T020	0000000	*48ms	023	T044	0000000	*8ms
012	T022	0000000	*48ms	024	T046	0000000	*8ms

page:01/05 T000=0ms {NULL}

MV1.39EN.ld2

**** ** MDI ** ********** ****** ********** **10:01:26**

COUNTR TIMER SER

TODISP CHKINF PLCDNG TRANCE KPAR TMRCTR DTABLE FILELS

Counter C parameter:

System PLC PLCPAR [Counter] Local00002.NC N0000001

C_No.	Addr	Cur.		C_No.	Addr	Cur.	
001	C000	0000020	0000060	013	C048	0000000	0000000
002	C004	0000001	0000016	014	C052	0000000	0000000
003	C008	0000000	0000000	015	C056	0000000	0000000
004	C012	0000000	0000000	016	C060	0000000	0000000
005	C016	0000000	0000000	017	C064	0000000	0000000
006	C020	0000000	0000000	018	C068	0000000	0000000
007	C024	0000000	0000000	019	C072	0000000	0000000
008	C028	0000000	0000000	020	C076	0000000	0000000
009	C032	0000000	0000000	021	C080	0000000	0000000
010	C036	0000000	0000000	022	C084	0000000	0000000
011	C040	0000018	0000000	023	C088	0000000	0000000
012	C044	0000000	0000000	024	C092	0000000	0000000

page:01/05 C000 now=20 def=60 {LUB.DATA: PREINSTALL INTERVAL (MIN.) , LUBRICATING (SEC.) }

MV1.39EN.ld2

**** ** MDI ** ********** ****** ********** **10:02:02**

COUNTR TIMER SER

TODISP CHKINF PLCDNG TRANCE KPAR TMRCTR DTABLE FILELS

PLC display setting:

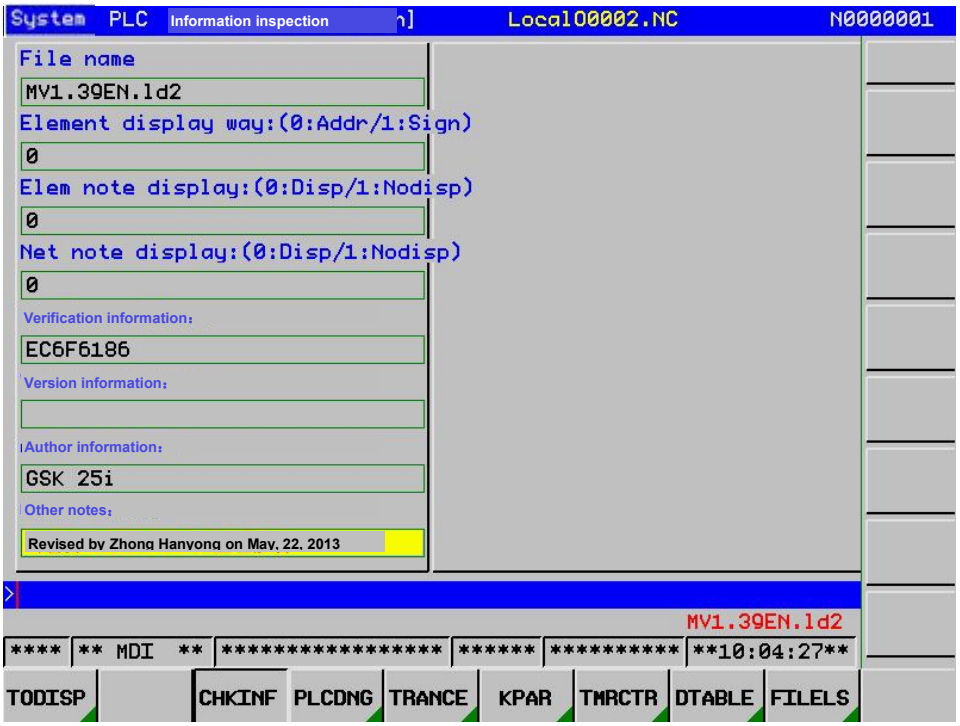

Data D parameter:

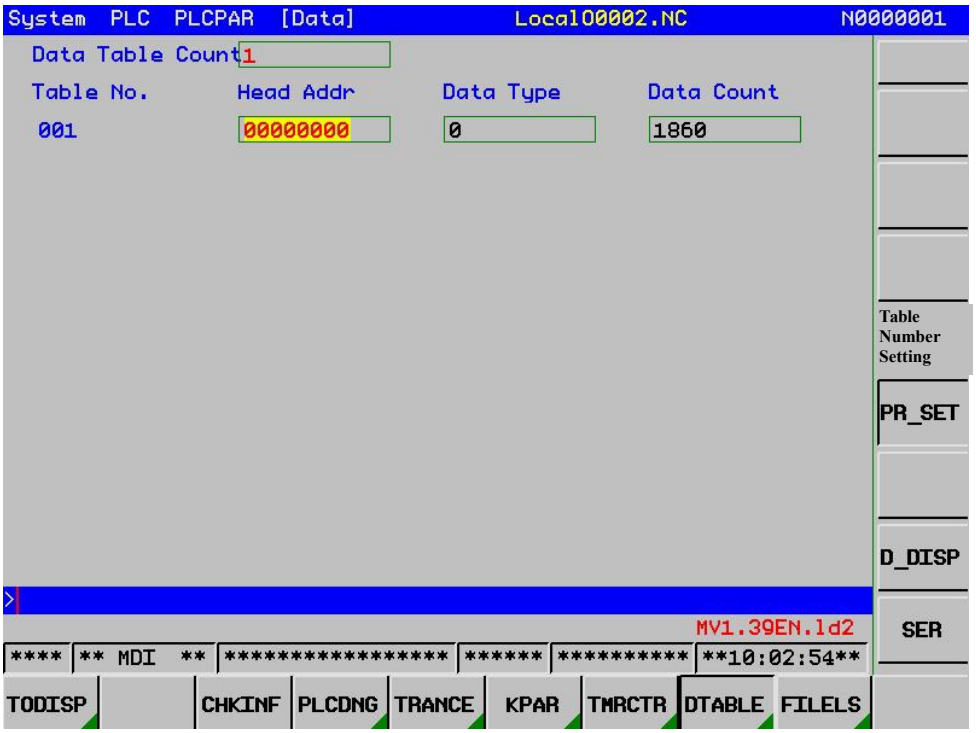

1. Property setting

Start address: Set the start address of each data sheet.

Data type: Set to 0 for 1-byte data, 1 for 2-byte data and 3 for 4-byte data.

Number of data: Set the number of data in each data sheet.

2. Data display

Display data contents of Data sheet.

3. Data sheet number setting

In the property setting interface, enter the number of tables to be set and press the soft key [Table Number Setting] to set the data sheet number.

4) Use the following method to move the cursor to the parameter number to be written or displayed. The specific methods are as follows:

a Enter the parameter number and press [Search].

b Move the cursor to the parameter number by using the flip key and , and the direction key , , and .

5) Enter a numeric value with the numeric key and [Enter] key.

1.4 Ethernet communication commissioning parameter

Ethernet is the signal and data path connected by the system and the external equipment. Axis drivers and I/O can only be controlled if the communication connection and parameter are set correctly. Ethernet communication is the basis of the normal operation of the system.

Relevant parameters:

Parameter number	Parameter name	Function description	Remarks
205	Servo communication ignored	Used to disconnect communication and shield communication alarm when the system is not connected to servo and I/O	Normally set to "0"
221	Total number of slave station equipment	Used to set the total number of connected slave stations, including feed axis servo, spindle servo, I/O unit, etc.	
222	Number of I/O equipment	Used to set the number of connected I/Os	The minimum value for this parameter is set to 1, even if the machine is not connected to 1 I/O
225	Connection sequence number corresponding to servo	Used to set the sequence number connected by the feed axis servo	
226	Connection sequence number corresponding to the spindle equipment	Used to set the sequence number connected by the spindle servo	
227	Connection sequence number corresponding to the I/O equipment	Used to set the sequence number connected by the I/O unit	

Setting interpretation:

The logical address of the servo driver connected to the system is set. The first equipment address connected to

the system Ethernet connection interface P1 is "1", and the second equipment connected in series is "2". By analogy, the corresponding address of each slave station is set to # 225 ~ # 227.

Setting example:

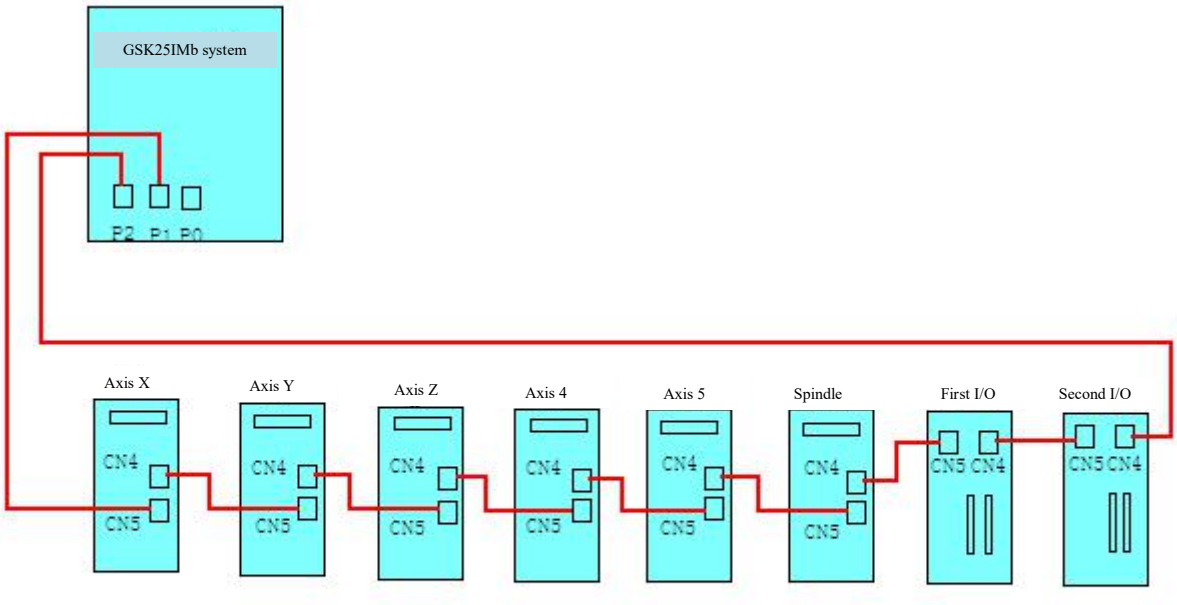

Notes:
1. The figure above is configured as Axis 5, and the missing corresponding axes can be directly skipped for downward connection without Axis 5
2. During I/O connection, addresses are allocated according to the connection sequence as follows:
the input X Addresses of first I/O unit are X9 - X14 and output Y Addresses are Y8 - Y12.
The input X Addresses of second I/O unit are X15-X20 and output Y Addresses are Y13 - Y16.

The parameters in this example are set as follows:

Parameter number	Setting value		Remarks
221 Total number of slave station equipment	8		
222 The number of I/O equipment	2		
225 Connection sequence number corresponding to servo	X	1	
	Y	2	
	Z	3	
	A (Axis 4)	4	
	C (Axis 5)	5	
226 Connection sequence number corresponding to the spindle equipment		6	
			In the case of multiple spindles, the sequence number setting box is automatically added.
227 Connection sequence number corresponding to the I/O equipment	1	7	
	2	8	

1.5 Relevant parameters of bus-type servo

1.5.1 Initialize servo parameters

In the case of system GSK-LINK Ethernet communication setup, it shall be done after the slave station equipment are set up.

GR2000 parameter recovery steps:

a. Disconnect any of the GSKLink connection wire and change the parameter PA-0 to 385

b. Enter the parameter PA-1 into the corresponding motor type code according to the motor code table

c. Execute EE-DEF to restore default parameters

d. After reinserting GSKLink, the system -parameters - parameter differences -overwriting the local, and the system reads the servo parameters from the servo.

After initialization of the servo parameters is executed, the system parameters 4201 shall correspond to the following motor codes:

Motor code	Motor model	Remarks	Motor code	Motor model	Remarks
101	60SJTR-MZ2003E(A4I)		146	130SJT-M075D(A4I)	
102	60SJTR-MZ2005E(A4I)		148	130SJT-M100B(A4I)	
104	80SJT-M024C (A4I)		150	130SJT-M100D(A4I)	
106	80SJT-M024E (A4I)		152	130SJT-M150B(A4I)	
108	80SJT-M032C (A4I)		154	130SJT-M150D(A4I)	
110	80SJTA-M032E (A4I)		156	130SJT-M050E(A4I)	
112	80SJTA-M024C (A4I)		158	130SJT-M060E(A4I)	
114	80SJTA-M024E (A4I)		160	130SJT-M075E(A4I)	
116	80SJTA-M032C (A4I)		162	130SJTE-M150D(A4I)	
118	80SJTA-M032E (A4I)		166	175SJT-M120E(A4I)	
120	110SJT-M020E (A4I)		168	175SJT-M150D(A4I)	
122	110SJT-M040D (A4I)		170	175SJT-M180B(A4I)	
124	110SJT-M040E (A4I)		172	175SJT-M180D(A4I)	
126	110SJT-M060D (A4I)		174	175SJT-M220B(A4I)	
128	110SJT-M060E(A4I)		176	175SJT-M220D(A4I)	
140	130SJT-M040D(A4I)		178	175SJT-M300B(A4I)	
142	130SJT-M050D(A4I)		180	175SJT-M300D(A4I)	
144	130SJT-M060D(A4I)		182	175SJT-M380B(A4I)	
1200	130SJTG-M040GH(A4I)		1216	175SJTG-M220EH(A4I)	
1202	130SJTG-M050GH(A4I)		1218	175SJTG-M300EH(A4I)	
1204	130SJTG-M060GH(A4I)		1220	175SJTG-M380EH(A4I)	
1206	130SJTG-M075GH(A4I)		1222	175SJTG-M380BH(A4I)	

Motor code	Motor model	Remarks	Motor code	Motor model	Remarks
1208	130SJTG-M100GH(A4I)		1224	175SJTG-M380DH(A4I)	
1210	175SJTG-M120EH(A4I)		1226	175SJTG-M500BH(A4I)	
1212	175SJTG-M150EH(A4I)		1228	175SJTG-M500DH(A4I)	
1214	175SJTG-M180EH(A4I)				

Notes:

The communication between the system and the servo drive is not normal, and Err-39 and Err-42 of drivers give and alarm, the initialization parameters will not be successful.

The drive must be powered up separately, and the default parameters must first be restored in the servo drive GR2000, with the specific operation as follows:

Step 1: Modify the password, modify PA-0 to 385;

Step 2: Modify the model, modify PA-1 to the corresponding motor model. Please refer to the above table for detailed model;

Step 3: Enter EE-DEF to press Enter key for about 3 seconds until the parameter is successfully recovered as indicated by the appearance of "FINISH"; power off and restart.

1.5.2 Servo motor direction setting

Motor rotation direction can be changed through parameters # 4003.5 CDIR and # 4003.6 FDIR:

Parameters	Name	Setting	Setting method
#4003.5 CDIR	Servo command direction	0: Forward 1: Reverse	1. When the reverse rotation direction of the motor is required, the two parameters shall be inverted simultaneously 2. Changing a single parameter may cause click movement and out-of-tolerance alarm
#4003.6 FDIR	Servo feedback direction	0: Forward 1: Reverse	

1.5.3 Absolute position zero setting

There are three ways to set absolute position zero, with the first one usually used.

1. Direct parameter setting zero

Method:

Enter the installation and commissioning password in the [Offset] and [Login] interface to gain authority to modify parameters.

The system is set to MDI mode. The interface is switched to [System] [Parameter] to change the parameter # 4001.3 APZ from 0 to 1. Zero is set in the process of system changing from 0 to 1, and then it shall reset after setting to clear the alarm.

The axis shall be moved to the vicinity of the zero position to be set and moved some distance in the direction set by parameter 1004.5 ZMIn. The parameter # 4001.3 APZ is changed to 1 after being set to 0, with the current position set to zero.

Notes:

The zero point set by directly modifying the parameter must be moved some distance in the direction set by parameter # 1004.5 ZMIn to eliminate the reverse gap, otherwise accuracy issues will arise due to the failure to eliminate the reverse gap.

2. Setting of back to reference point with no block

Method:

Enter the installation and commissioning password in the [Offset] and [Login] interface to gain authority to modify parameters.

The system is set to MDI mode. The interface is switched to [System] [Parameter] interface to change parameter # 1001.1 DLZ to 1 and turn on the function of back to the reference point without block. # 1004.5 ZMIn selects the direction of back to the reference point, and parameter # 1060 sets the amount of movement of the motor per revolution, with the gear ratio of the feed axis set correctly.

Parameter # 4001.3 APZ is changed from 0 to 1 and changed to "0" again after clearing driver Err8 alarm. The axis is moved to the vicinity of the zero position to be set, and Emergency Stop shall be pressed and then released to destroy the absolute zero of the memory, otherwise it will be directly moved to the previously set zero in homing process

It shall be switched to "Back to Machine Zero" mode. The direction key of the corresponding axis is pressed, the low-speed movement of the axis will stop when it meets the encoder Z signal, and the system will automatically set parameter # 4001.3 APZ to 1 to finish the zero setting.

Notes:

The parameters related to back to the reference point shall be set when using this function.

3. Setting of manually back to reference point

It is applicable to machine with back to reference point switch, but not applicable for those without back to reference point switch.

Method:

Enter the installation and commissioning password in the [Offset] and [Login] interface to gain authority to modify parameters.

The system is set to MDI mode. The interface is switched to [System] [Parameter] to change the parameter #1001.1 DLZ to 0 and turn off the function of back to reference point without block. #1004.5 ZMIn selects the direction of back to reference point, and parameter #1060 sets the amount of motor movement per revolution, with the gear ratio of the feed axis set correctly.

Parameter # 4001.3 APZ is changed from 0 to 1 and changed to "0" again after clearing driver Err8 alarm. "Emergency Stop" shall be pressed and then released to destroy the absolute zero of the memory, otherwise it will be directly moved to the previously set zero in homing process.

It shall be switched to "Back to Reference Point" mode. The direction key of the corresponding axis shall be pressed to start the action for back to reference point. When the axis moves quickly to under-pressure deceleration switch, it will be reduced to the speed back to reference point. When it moves to the encoder Z signal out of the switch, it stops. The system automatically sets parameter # 4001.3 APZ to 1 to complete the zero setting.

Notes:

The parameters related to back to the reference point shall be set when using this function.

1.5.4 Servo parameter adjustment

Based on the default parameters, the following parameters are adjusted according to operation:

Parameters	Name	Value range	Default value	Function description
4009	Position proportional gain	0~2000	245	① Set the proportional gain of the position loop regulator. ② The larger the set value is, the higher the gain and stiffness are, and the smaller the position lag is under the same frequency command pulse. However, too large value can cause oscillation or over-adjustment. ③ The parameter values are determined according to the specific servo drive unit model and load condition.
4017	Numerator of electronic gear ratio		8192	For translational axis: Set according to pitch A (unit: mm) of the machine screw, the line number C (unit: pulse number/turn) of the motor photoelectric encoder and the pulse equivalent M (unit: pulse number/mm) of the system; 4017/4018=C/(M*A); For rotating axis: Set according to the transmission gear ratio P (driven gear/driving gear), the line number C (unit: pulse number/turn) of the motor photoelectric encoder and the pulse equivalent M (unit: pulse number/degree) of the system; 4017/4018=C/(M*P*360)
4018	Denominator of electronic gear ratio		5000	
4215	First proportional gain of speed loop	10~3000	In accordance with motor specification	① Set the proportional gain of the speed loop regulator. ② The larger the setting value is, the higher the gain is and the greater the stiffness is. The parameter values are determined according to the specific servo drive unit model and load condition. In general, the larger the load inertia is, the larger the set value is. ③ Under the condition that the system does not generate oscillation, it shall be set as large as possible.
4216	Speed for first integral time constant	1~3000	In accordance with motor specification	① Set the integral time constant of the speed loop regulator. ② Increase set value Advantages: Faster response to speed command, stronger motor rigidity; Disadvantages: Set value is too large, easy to cause the vibration of the motor itself and resonance of mechanical device accompanied by vibration sound caused by the mechanical vibration. ③ Decrease set value

Parameters	Name	Value range	Default value	Function description
				Advantages: When the load inertia is large, it is not easy to cause the resonance and swing of the motor and the mechanical device; Disadvantages: Slow response to speed command, easy to cause fluctuations in the speed when the load changes and affect the surface finish of machined workpieces.
4218	Speed detects low-pass filter coefficient	10~5000	In accordance with motor specification	① Set the speed to detect the characteristics of low-pass filter. ② The smaller the value is, the lower the cut-off frequency is, and the less noise the motor generates. If the load inertia is large, the set value can be reduced appropriately. Too small a value slows the response and may cause oscillation. The larger the value is, the higher the cut-off frequency is, and the faster the speed feedback response is. If a higher speed response is required, it can be increased appropriately, but squeaking may be produced when it is too large.

1.6 Related parameter configuration of spindle

1.6.1 CNC system parameter setting

Parameters	Name	Description
5000.0	Spindle speed arrival signal	0: Do not check 1: Check (Note: When this parameter is set to 1, the spindle does not rotate, and the Cutting Feed G01 Command will not be executed)
5000.2	Spindle alarm level selection	0: Low level 1: High level
5000.3	Check of analog spindle rigid tapping speed and position switch signal	0: Yes 1: No
5000.4	Selection of analog spindle pulse output mode	0: Pulse + direction 1: Phase A/B
5000.5	Control output in analog spindle speed mode	0: Analog voltage 1: Pulse
5000.6	Selection of analog spindle position control mode	0: Open loop 1: Closed loop
5002.3	Spindle ignored	0: No 1: Yes
5005	System spindle number selection	Used to set the number of spindles used

5006	Analog spindle selection	Used to set the number of analog spindles used
5100	Spindle analog gain	Used to adjust the maximum analog voltage of the spindle
5101	Spindle speed offset compensation	Zero drift compensation for spindle analog voltage
5103	Spindle analog output direction	0: Forward direction 1: Reverse direction
5105	Maximum acceleration at spindle position control	Default 139
5108	Pulses per rotation of position encoder (wires * 4)	Used for speed feedback display and spindle closed loop control
5110	Motor speed when spindle gear is shifted	Used for spindle gear shift
5113	Check the time of spindle speed arrival signal	Set the time to check the spindle speed arrival signal
5115	Maximum speed of spindle motor	Maximum speed of the spindle motor for setting the analog voltage of 10V
5116	Upper limit of spindle speed	Maximum speed limit of spindle
5120	Maximum speed of spindle at 1st gear	Maximum speed of spindle at each gear
5121	Maximum speed of spindle at 2nd gear	
5122	Maximum speed of spindle at 3rd gear	
5123	Maximum speed of spindle at 4th gear	
5130~5132	Speed at spindle gear shift switching point	Spindle speed for setting gear shift switching point
5160~5168	Gear ratio at each gear	Used to set the gear ratio at each gear

1.6.2 GR bus spindle driver parameter setting

1. NC parameter setting

Parameter number	Notes	Set value	Remarks
5006	0: Digital spindle 1: Analog spindle	0	Use GR3000 series bus spindle

2. Initialize drive parameters

GR3000 parameter recovery steps:

a. Disconnect any of the GSKLink connection wire and change the parameter PA-0 to 385

b. Enter the parameter PA-1 into the corresponding motor type code according to the motor code table

c. Execute EE-DEF to restore default parameters

After reinserting GSKLink, the system -parameters - parameter differences -overwriting the local, and the system reads the servo parameters from the servo.

List of spindle motor code: (software version: V1.10)

Motor model code	Spindle motor model	Rated current	Voltage grade	Standard servo unit
501	CTB-5.5BL with Tengda 6144 line encoder	14.5A	380V	GR3050Y-LP2
502	CTB-5.5BL with IGS1024 encoder	14.5A	380V	GR3050Y-LP2
610	ZJY182-2.2BH-LA2	13A	220V	GR2050Y-LP2
609	ZJY182-3.7BH-L A2	26A	220V	GR2100Y-LP2
613	ZJY208-3.7AM-L A2	17.5A	220V	GR2075Y-LP2
611	ZJY208-3.7BH-L A2	22A	220V	GR2075Y-LP2
614	ZJY208-5.5AM-L A2	28.2A	220V	GR2100Y-LP2
608	ZJY208-5.5BH-L A2	31.8A	220V	GR2100Y-LP2
612	ZJY208-7.5BM-L A2	29.4A	220V	GR2100Y-LP2
617	ZJY182-1.5BH A2	7.3A	380V	GR3048Y-LP2
618	ZJY182-2.2BH A2	7.5A	380V	GR3048Y-LP2
652	ZJY182-2.2CF A2	9A	380V	GR3048Y-LP2
651	ZJY182-3.7BL A2	10.4A	380V	GR3050Y-LP2
619	ZJY182-3.7BH A2	15.5A	380V	GR3050Y-LP2
654	ZJY182-3.7DF A2	13A	380V	GR3050Y-LP2
653	ZJY182-5.5CF A2	19A	380V	GR3075Y-LP2
641	ZJY182-5.5EH A2	17A	380V	GR3075Y-LP2
642	ZJY182-7.5EH A2	21A	380V	GR3100Y-LP2
643	ZJY208A-2.2AM A2	6.7A	380V	GR3048Y-LP2
620	ZJY208-2.2BH A2	6.3A	380V	GR3048Y-LP2
621	ZJY208A-2.2BH A2 ZJY208-2.2BM A2	8.9A	380V	GR3048Y-LP2
640	ZJY208A-3.7WL A2	11.3A	380V	GR3050Y-LP2
644	ZJY208A-3.7AM A2	10.2A	380V	GR3050Y-LP2
622	ZJY208A-3.7BM A2 ZJY208-3.7BH A2	8.6A	380V	GR3050Y-LP2
634	ZJY208A-3.7BH A2	12.6A	380V	GR3050Y-LP2
615	ZJY208A-5.5AM A2	16.3A	380V	GR3075Y-LP2
623	ZJY208A-5.5BM A2 ZJY208-5.5BH A2	13.2A	380V	GR3075Y-LP2
635	ZJY208A-5.5BH A2	18.4A	380V	GR3075Y-LP2
624	ZJY208A-7.5BM A2	17.3A	380V	GR3075Y-LP2

Motor model code	Spindle motor model	Rated current	Voltage grade	Standard servo unit
	ZJY208-7.5BH A2			
636	ZJY208A-7.5BH A2	22.4A	380V	GR3100Y-LP2
645	ZJY208A-11EH A2	25.2A	380V	GR3100Y-LP2
638	ZJY265A-5.5WL A2	16.3A	380V	GR3075Y-LP2
639	ZJY265A-7.5WL A2	21.4A	380V	GR3100Y-LP2
616	ZJY265A-7.5AM A2	21.5A	380V	GR3100Y-LP2
625	ZJY265A-7.5BM A2	18A	380V	GR3075Y-LP2
648	ZJY265A-7.5BH A2	21A	380V	GR3100Y-LP2
637	ZJY265A-11WL A2	30A	380V	GR3148Y-LP2
646	ZJY265A-11AM A2	30.9A	380V	GR3148Y-LP2
626	ZJY265A-11BM A2	26A	380V	GR3100Y-LP2
649	ZJY265A-11BH A2	30A	380V	GR3148Y-LP2
628	ZJY265A-15AM A2	48.3A	380V	GR3150Y-LP2
627	ZJY265A-15BM A2	35A	380V	GR3150Y-LP2
650	ZJY265A-15BH A2	40.7A	380V	GR3150Y-LP2
630	ZJY265A-18.5BM A2	48.7A	380V	GR3198Y-LP2
629	ZJY265A -22BM A2	58A	380V	GR3198Y-LP2
631	ZJY265A-30BL A2	69A	380V	GR3300Y-LP2
632	ZJY265A-37BL A2	87A	380V	GR3300Y-LP2

Note: GSK CNC spindle motor listed in the table is equipped with 5000-wire encoder as standard. If 1024-wire encoder is configured, the prefix of the same model code 6 shall be changed to prefix 5: for example, model ZJY208A-7.5BM-LA2 motor code is 624, while model ZJY208A-7.5BM-L motor code is 524.

3. Speed control commissioning:

Parameter number	Notes	Set value	Remarks
5351	Speed invert	0/1	Modified in the opposite direction during speed running
5354	Highest speed limit	10000	Consistent with the maximum speed set by the system
5357	Acceleration time	100	Appropriately adjusted, generally no less than 100
5358	Deceleration time	200	

4. Orientation commissioning of spindle:

Parameter number	Notes	Set value	Remarks

5397	Selection of position feedback input signal	1	0: Second code disk 1: Motor code disk 2: Reservation
5399	Positioning speed	100	Can be changed to 1000 to speed up positioning
5402	Position window during orientation	2	
5403	Positioning position		Go to the position to be orientated to check the value of System Diagnosis No. 206 or Drive DP-APO, and enter parameter 5403.

5. Rigid tapping commissioning:

Parameter number	Notes	Default Value	Remarks
2140	Maximum speed of spindle during rigid tapping (1st gear)	3000	It is recommended that this parameter be set to 3000 when there is no gear shift
2141	Maximum speed of spindle during rigid tapping (2nd gear)		Set according to the speed at each gear when there is gear shift
2142	Maximum speed of spindle during rigid tapping (3rd gear)		
2143	Maximum speed of spindle during rigid tapping (4th gear)		
2170	Position loop gain of rigid tapping spindle and tapping axis (1st gear)	350	350±25
2180	Gain coefficient of spindle loop during rigid tapping (1st gear)	320	320±15
5105	Maximum acceleration of spindle during tapping	139	When the value is small, the acceleration is slow. The larger the value is, the faster the acceleration is. But alarm will be given when motor response capacity is exceeded
5106	Closed-loop spindle direction control	0~3	
5318	Lowpass filtering coefficient of speed detection	100	
5345	Second proportional gain of speed loop	200/400	
5346	Second integral time constant of speed loop	100	
5360	Proportional gain of current	Default value	Fine adjustment only
5361	Current integral coefficient	Default value	Fine adjustment only

6. Solutions to common problems

- If the ERR-27 alarm is given for the first time in operation, any two phases for the motor power lines U, V and W shall be exchanged.
- In incorrect spindle steering, commissioning: #5106.
- For bad gear, debugging parameters #2170 cooperates with #2180, with reference diagnostics: #300 and #301, and monitoring system diagnostics #300, #301 synchronicity. When the spindle is 1:1 driving, parameters #2170 and #2180 are adjusted to check diagnostics #300 and #301 and make the two diagnostic values equal.

  Parameter #2170 functions for diagnosing #300 and #301, while parameter #2180 functions only for diagnosing #300.
- The spindle ➔starts➔ and stops with a "chirp" sound.

  Decrease spindle driver #5360 parameter.
- There is a noise when the spindle stops.

  Decrease spindle driver #5345 or 5318 parameter.
- The spindle runs at normal speed (rigid tapping S ≈ 1000 r/min) and waggles when it stops.

  Increase driver #5345 parameter and decrease driver #5346 parameter.
- The high-speed tapping of spindle waggles when the running stops

  Decrease system #2170 and 2180 parameter value (reduced step-by-step).

  The #5348 parameter shall be properly reduced during spindle orientation, if there is any overswing or the spindle swings when it stops.

1.6.3 GS spindle analog driver parameter setting

Servo parameters	Name	Description
PA4	Control mode selection	Set to 3 to place the driver in speed/position control mode
PA5	Position command mode	Set to 0, pulse + direction
PA6	Selection of speed command mode	Set to 0, -10V∽+10V
PA15	First proportional gain of speed loop	Set to 1100 Note: Rigid tapping standard, tapping parameters
PA16	First integral time constant of speed loop	Set to 4 Note: Rigid tapping standard, tapping parameters
PA19	First proportional gain of position loop	Set to 85 Note: Rigid tapping standard, tapping parameters
PA28	Direction of position command	Set to 0 when the rigid tapping direction is reversed from the command direction
PA51	Rotation direction invert	Modified when the spindle rotation direction is reversed from the command
PA56	Zero drift compensation of user analog command	Mainly when the spindle is 0 rpm, the spindle still rotates at a slight speed
PA60	Zero speed range of analog	Set to 0, mainly for setting the minimum speed range of the

	command	spindle.

Setting method for maximum speed parameter of spindle motor (set when the maximum motor speed exceeds the factory default of 6000 rpm):

a	Set change password of spindle driver parameters: PA0=8888
b	Set PA121 to the corresponding value:

PA121 setting value	Maximum motor speed rpm	P23 and P42 can set the range rpm	Remarks
1	3000	0 ~3100	
2	6000	0 ~6200	Default value
3	9000	0 ~9300	
4	12000	0 ~12400	
5	15000	0 ~15500	

c	Save parameters
d	The servo spindle driver is powered off and then powered on again.
e	Set the values of new spindle driver parameters P52 and P54 (system parameter #5115 shall be modification shall be consistent with it after modification)

Setting of GS spindle orientation position:

a	The spindle motor rotates at least more than one turn before rotating to the location to be positioned
b	Check the spindle drive dp-APO display value ⊢ XXXX and enter the value into the parameter PA103
c	Save parameters
d	After more than one turn of the command spindle, the system command is used to position the action and confirm whether the position is correct

1.7 Speed parameter configuration

Whether the workpiece machining is smooth, whether the machining efficiency is high and what the effect is, the following parameters of system speed need to be adjusted:

Parameter number	Name	Value range	Default Value	Function description	Remarks
1224	Maximum cutting feed composite speed (common to all axes)	0-1000000	10000	Maximum speed limit for multi-axis linkage movement	
1225	Maximum cutting feed rate in automatic mode	0-1000000	10000	Maximum speed of cutting feed in automatic mode	
1226	Maximum fast-moving speed in automatic mode	0-1000000	10000	Maximum speed of G00 in automatic mode	
1231	F0	0-99999	100	Default speed for manual and automatic feed rate F0	F0 assigned speed
1232	Manual feed rate	0-999999	1000		
1233	Manual fast-moving speed	0-999999	10000	Manual fast-moving speed	
1239	Manual maximum speed	0-999999	10000	Manual maximum speed limit	
1240	Maximum speed for single-step run		10000	Maximum speed for single-step run	
1501	Minimum feed speed of automatic corner deceleration		120	Minimum feed speed of automatic corner deceleration	

1.8 Acceleration parameter configuration

Another factor that affects the machining process and effect is the system acceleration. Common acceleration parameters are as follows:

Parameter number	Name	Value range	Default Value	Function description	Remarks
1400.6	PACD	0/1	1	0: linear type; 1: S curve type The linear acceleration is much lower than the S curve acceleration.	Suggested setting 1
1440	Maximum acceleration	0~25000	0.5	The maximum acceleration of each axis is controlled in linear acceleration/deceleration (1400.6 = 0) of the system. The greater the set value is, the shorter the acceleration/deceleration time is, and the greater the	

Parameter number	Name	Value range	Default Value	Function description	Remarks
				impact is at start/stop.	
1442	Maximum acceleration of circular interpolation feed	0~25000	0.5	Maximum acceleration of circular interpolation feed.	Suggested setting range is from 0.1 to 0.8. When the numerical value is small, the machining surface has high quality. When the value is large, the machining efficiency is high
1445	RESET acceleration	0~25000	0.7	Pause or RESET default acceleration: The larger the value is, the faster the feed hold and reset response are, but too large value can cause vibration and abnormal noise.	High-speed machine shall be increased to about 1
1446	Default acceleration of handwheel	0~25000	0.6	Maximum acceleration of handwheel: When the machine is not vibrating, the larger the value is, the better the real-time response of each axis is.	
1447	Manual default acceleration	0~25000	0.6	Maximum manual acceleration: When the machine is not vibrating, the larger the value is, the better the real-time response of each axis is.	
1410	Fast feed S curve acceleration/deceleration time constant T1	0~4000	64	Acceleration/deceleration L-type time constant T or S-type T1 before fast feed.	
1411	Fast feed S curve acceleration/deceleration	0~4000	128	Fast feed S-type acceleration/deceleration	

Parameter number	Name	Value range	Default Value	Function description	Remarks
	time constant T2			time constant T2.	
1480	Cutting feed S curve acceleration/deceleration time constant T1	0~4000	128	Acceleration/deceleration linear type time constant T/or S-type T1 before cutting feed.	
1481	Cutting feed S curve acceleration/deceleration time constant T2	0~4000	64	Acceleration and deceleration S-type time constant T2 before cutting feed.	

1.9 Back-to-zero configuration of system

When using incremental encoder, the following parameters need to be set correctly to enable the machine to establish a reference point through manual back-to-zero.

When using absolute value encoder, it is necessary to establish absolute position zero for machine operation. The machine zero can be set through manual back-to-zero when parameter # 4001.3 APZ is set to 0. When the machine is not fitted with the back-to-zero switch, the zero can be set by manually modifying the parameter 4001 # 3APZ from 0 to 1. The following parameters need not be set when setting zero manually.

The parameters to be set for mechanical back-to-zero are as follows:

Parameter number	Name	Value range	Default Value	Note of interpretation	Remarks
#1004.5	ZMIn	0/1	0	Set the movement direction of each moving axis of the machine homing: 1 forward direction - 0 reverse direction.	
#2401.5	DEC	0/1	0	Deceleration signal for homing: 0: Deceleration at 0, 1: Deceleration at 1.	
#1060	Pitch of axis screws	0~ 999999	8	Amount of movement of the feed axis per revolution (unit: mm or °).	Affect back-to-zero accuracy
#1234	First FL speed of back-to-zero	50~ 10000	300/75	As each axis homing, it decelerates to the speed after receiving the deceleration signal and continues to move until a z-direction pulse is encountered.	The larger the value is, the faster the back-to-zero is. But the back-to-zero accuracy will be lowered
#1235	Initial speed of back-to-zero	1000~ 10000	4000/2000	Speed at the first stage when each axis goes home.	
#1236	Second FL	1~1000	7/2	As each axis goes home, the speed	

	speed of back-to-zero			used during the second Z-direction pulse is found.	
#1444	Default acceleration of back-to-zero	0~200	0.139/80	Acceleration used when each axis goes home.	

1.10 Other common parameter configuration

Generally, the following parameters need to be set before system machining:

Parameter number	Name	Value range	Default Value	Note of interpretation	Remarks
#1080	Positive soft limit	0~99999.99	99999.99	Positive soft limit of each axis	Set maximum at infinity
#1081	Negative soft limit	-99999.99~0	-99999.99	Negative soft limit of each axis	Set minimum at infinity
#1051	Coordinate value of the second reference point of each axis in mechanical coordinates	-99999.99~99999.99	0	Set tool change point	According to the machine structure, the tool change point is set without affecting the machining.
#1403.5	Reverse gap compensation switch	0	0	Reverse gap compensation: 0: No compensation 1: Compensation	After setting this value, it needs to set the compensation amount based on the measurement
#4121	Reverse gap compensation amount	0~999999	0	Cutting reverse gap compensation amount	Set to the value actually tested Unit: mm

1.11 Other function-related parameters

Pitch error compensation:

Parameter number	Name	Value range	Default Value	Note of interpretation
#2800.0	SCRW	0/1	0	Whether to compensate for pitch error: 0: Do not proceed 1: Proceed

#2800.1	WDIR	0/1	0	Methods for pitch error compensation: 0: Unidirectional 1: Bidirectional
#2810	Compensation number of each axis reference point	0~1023	0	Setting compensation origin
#2811	Reverse farthest compensation number	0~1023	0	Number of thread pitch error compensation point at the far end in negative direction of each axis
#2812	Forward farthest compensation number	0~1023	0	Number of pitch error compensation point at the far end in the positive direction of each axis
#2813	Pitch compensation rate	1~100	1	Rate of pitch compensation value
#2814	Pitch compensation interval	0~9999.9999	0	The distance between two adjacent points when calculating the pitch compensation

Position switch

Parameter number	Name	Value range	Default Value	Note of interpretation	Remarks
#2401.3	SWI	0/1	0	Whether the position switch is valid: 0: Invalid 1: Valid	
#2500-2531		0~5	0	The position switch corresponds to the number of each servo axis	
#2532-2563		0~999999	0	Forward maximum range of position switch	
#2564-2595		0~999999	0	Reverse maximum range of position switch	

1.12 Synchronous axis commissioning

The synchronous axis function is used for two motors to drive the same feed axis. Because of the mechanical hard connection, the two drives must be strictly synchronized. A synchronization group consists of 1 driving axis and 2 driven axes at most.

Parameters	Name	Value range	Default Value	Note of interpretation	Remarks
#4020.0	SNY	0/1	0	Valid signs for synchronization of the feed axis 0: Invalid 1: Valid	Set 1 with synchronous axis
#4020.1	ADJ	0/1	0	Modification form for synchronization of the feed axis	Used to manually correct synchronization error. Set 1 to cancel

Parameters	Name	Value range	Default Value	Note of interpretation	Remarks
				0: Invalid 1: Valid	synchronization and adjust an axis separately
#4021	Number of the main control axis	0 ~ maximum number of the control axis	0	Set the number of the driving axis for the driven axis	For example, when the driven axis of Y is on the V axis, the V axis parameter is set to 2
#4022	Allowable synchronization error of the coordinates of the machine	0~99999	0	Set allowable machine coordinate deviation between driving and driven axes	Set driven axis only
#4023	Allowable synchronization error of position deviation	0~99999	0	Set allowable detection position deviation between driving and driven axes	Set driven axis only
#4024	Allowable compensation of synchronous adjustment	0~99999	0	Set the allowable synchronization deviation compensation amount	Set driven axis only
#4025	Allowable deviation of synchronous torque	0~99999	0	Set allowable torque deviation between driving and driven axes	Set driven axis only
#4026	Zero amplitude of synchronous error compensation	0~99999999			Set driven axis only
#4027	Gains of synchronous error compensation	1~1024	1		Set driven axis only

Notes:

1. The servo parameters of driving and driven axes shall be set consistently, especially the gain of the position loop must be consistent.

2. When setting synchronous axis zero, Emergency Stop shall be pressed or parameter 4024 (allowable compensation amount for synchronous adjustment) shall be set to 0 in order to avoid another axis following adjustment, and parameter 4024 is changed to original value after zero of both axes are set consistently.

3. After adjusting the parameters, the synchronous current and synchronization error between two axes shall be observed during operation. If the difference between two axes is too large, it is an incorrect or mechanical problem.

1.13 Axis 4 commissioning

1.13.1 CNC rotating axis commissioning

Parameter number	Name	Value range	Default Value	Note of interpretation	Remarks
#800	Select the number of axes controlled by the system	1-8	3	Set the number of feed axes controlled by the system	
#801	Select the number of linkage axes in the system	1-8	3	Set the number of linkage axes controlled by the system	
#1020	Name of programming axis for each axis	65.66.67.85.86.87.88.89.90	65	Set the name for each axis	Axis A 65, Axis B 66, Axis C 67
#1023.1	ROT	0/1	1	Whether each axis is a rotating axis or a translating axis 0: Translating 1: Rotating	
#1023.2	Coordinate axis type of rotating axis	0/1	0	Coordinate axis type of rotating axis 0: rotating axis type 1: Linear axis type	
#1023.5	Relative coordinate display	0/1	0	Relative coordinate display: 0: Command value within 1:360 degrees	
#1023.6	Absolute coordinate display	0/1	0	Absolute coordinate display: 0: Command value within 1:360 degrees	

1.13.2 Indexing table commissioning

Parameter number	Name	Value range	Default Value	Note of interpretation	Remarks
#1030.7	ITI	0/1	0	Function of indexing table is valid: 0: Invalid	Set that the axis which activates the indexing table cannot be moved

				1: Valid	manually
#1037.3	IDX	0/1	0	Indexing sequence of indexing table: 0: Type A 1: Type B	
#1931	Minimum indexing angle of indexing table	0~ 360.000	0		After setting the minimum angle parameter, the programming command value of the axis can only be an integer multiple of the minimum angle, otherwise, an alarm will be activated.
#1932	Setting of indexing axis of indexing table	0~8	0	Set the function axis number of indexing table	For example, if Axis 4 is set as the indexing axis, the parameter is set to 4

Chapter 2 Accuracy compensation

2.1 Reverse gap compensation

1. Normal reverse gap compensation:

When #1403.4 is set to 0, the compensation value is set in parameter #4121, and the compensation value of each axis ranges from 0 to ± 9999.9999 mm.

2. Separate compensation for fast-moving and cutting feed reverse gap:

When #1403.4 is set to "1", high accuracy machining can be achieved by compensating the gap values with different reverse gaps during fast-moving or cutting feed respectively, depending on the change in feed speed.

The measured reverse gap of the cutting feed is set to #4121; the reverse gap measured during fast-moving is set to parameter #4122.

3. Reverse gap compensation step size: Set the reverse gap compensation amount that the system allocates to each interpolation cycle.

2.2 Unidirectional pitch error compensation

Function and purpose

If the pitch error compensation data is assigned, the pitch error of each axis can be compensated in detection unit. The compensation positions of the compensation data for each axis are set at fixed intervals. The compensation origin is the reference point of each axis of the machine. Compensation data is set according to the measured error.

Pitch error compensation data can be set on the "Pitch Compensation" interface under the 偏置OFT 设定SET system menu. Setting or modifying pitch compensation values requires authority from the machine manufacturer or above at the "Login".

When compensating for pitch error, the following parameters must be set. The pitch error for each compensation point (each point is numbered in order of position) shall be set according to these parameters.

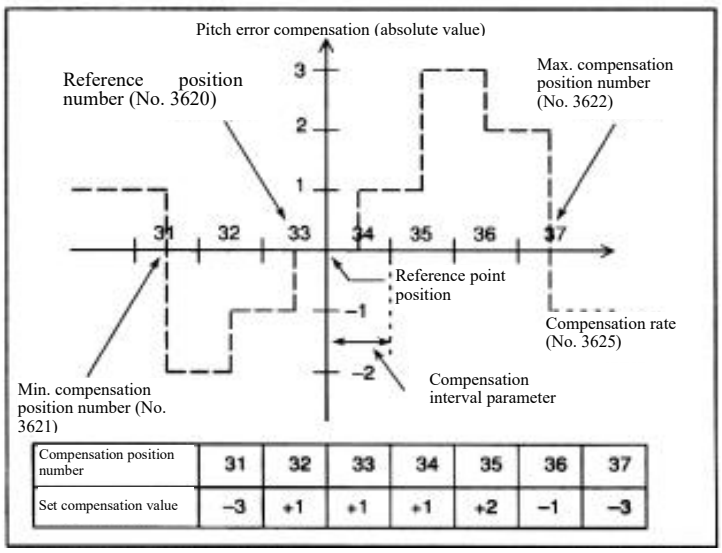

Compensation position number	31	32	33	34	35	36	37
Set compensation value	-3	+1	+1	+1	+2	-1	-3

In the following example, the reference point is used as the reference point for compensation, and the compensation number is set to 33.

Whether the pitch compensation is performed: Parameter #2800.0

Unidirectional and bidirectional selection of pitch compensation: Parameter #2800.1

Pitch error compensation position number of reference point (per axis): Parameter #2810

Minimum position number of pitch error compensation (per axis): Parameter #2811

Maximum position number of pitch error compensation (per axis): Parameter #2812

Pitch error compensation (per axis) rate: Parameter #2813

Pitch error compensation (per axis) point spacing: Parameter #2814

Detail description

Definition of compensation position: In order to assign compensation position for each axis, the forward and reverse movement directions of compensation shall be assigned with reference to the reference point. If the machine travel exceeds the assigned range in either the forward or reverse direction, pitch error compensation does not work outside the assigned range.

Compensation position point number: 1024 points can be compensated from 0 to 1023 on the setting screen of pitch error. The available parameters assign compensation points arbitrarily to each axis. The compensation position number of the reference point (parameter 2810), the minimum position number of compensation (parameter #2811) and the maximum position number of compensation (parameter #2812) must be set for each axis.

Compensation point interval: Compensation position (point) is equal interval, set by parameter #2814 separately for each axis.

The minimum compensation interval is limited and can be calculated as follows:

Minimum interval of compensation point = maximum feed speed (fast-moving speed) * (interpolation period/60000) * compensation rate

Unit:

Minimum interval for compensation: mm, inch, deg

Maximum feed rate: mm/min, inch/min, deg/min

[Example] The minimum interval between compensation points is 2 mm when the maximum fast-moving speed is 15000 mm/min.

Setting example

In linear axis

Machine travel: -400 mm ~ + 800 mm

Pitch error compensation point interval: 50 mm

Compensation position number for reference point: 40

After assigning the above value, the farthest compensation position number in the reverse direction is as follows:

Farthest compensation position number in the reverse direction = compensation position number of reference point-(machine travel/compensation position interval in the reverse direction) +1

= 40 - 400/50 +1=33

The farthest compensation position number in the forward direction is as follows:

Farthest compensation position number in the forward direction = compensation position number of reference point + (machine travel/compensation position interval in the forward direction)

= 40+800/50 = 56

The correspondence between the machine coordinate value and the compensation position number is as follows:

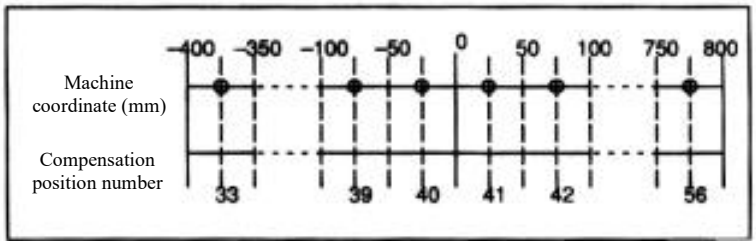

In the figure above, the compensation value is output at the position marked with O.

Therefore, the parameters are set as follows:

Parameters	Setting value
2810: Reference point compensation position number	40
2811: Minimum compensation position number	33
2812: Maximum compensation position number	56
2813: Compensation rate	1
2814: Pitch error compensation point interval	50

The compensation value is output between the corresponding two coordinate values at the compensation position number.

The following is an example of the amount of compensation:

Point No.	33	34	35	36	37	38	39	40	41	42	43	44	45	46	47	48	49	…	56
Compensation	-2	-1	-1	+2	0	+1	0	+1	+2	+1	0	-1	-1	-2	0	+1	+2	…	+1

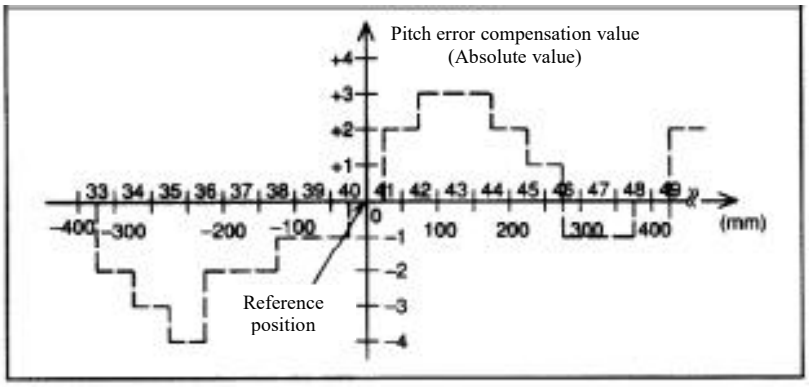

When rotating the axis

Amount of movement per rotation: 360°

Pitch error compensation point interval: 45°

Compensation position number for reference point: 60

When the above parameters are assigned, the farthest compensation position number in the reverse direction of the rotating axis = compensation position number of the reference point.

The farthest compensation position number in the forward direction is as follows:

Farthest compensation position number in forward direction = compensation position number of reference point + (amount of movement per rotation/compensation interval)

= 60 + 360/45 = 68

> Notes:
>
> Compensation data for rotating axis are designed to be within an amount of movement per rotation in the forward direction. If the actual operation is within an amount of movement per rotation in the reverse direction, an amount of movement per rotation must be added to convert to an amount of movement per rotation in the forward direction.
>
> Example:
>
> When setting the compensation value for the -45° position, -45° + 360° = 315° must be set first, and then the compensation value for the -45° position is set on the compensation sequence number corresponding to 315°.

Thus, the correspondence between the machine coordinate value and the compensation position number is as follows:

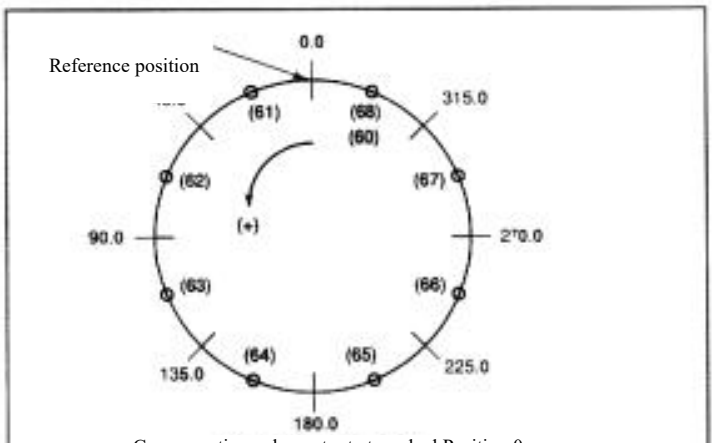

Compensation value output at marked Position 0

Therefore, the parameters are set as follows:

Parameters	Setting value
2810: Reference point compensation position number	60
2811: Minimum compensation position number	60
2812: Maximum compensation position number	68
2813: Compensation rate	1
2814: Pitch error compensation point interval	45
1068: Amount of movement per rotation	360

If the sum of the compensation values from positions 61 to 68 is not zero, the compensation value per rotation will accumulate, resulting in a positional deviation.

At compensation positions 60 and 68, the same value must be set.

The following is an example of the amount of compensation:

Point No.	60	61	62	63	64	65	66	67	68
Compensation	+1	-2	+1	+3	-1	-1	-3	+2	+1

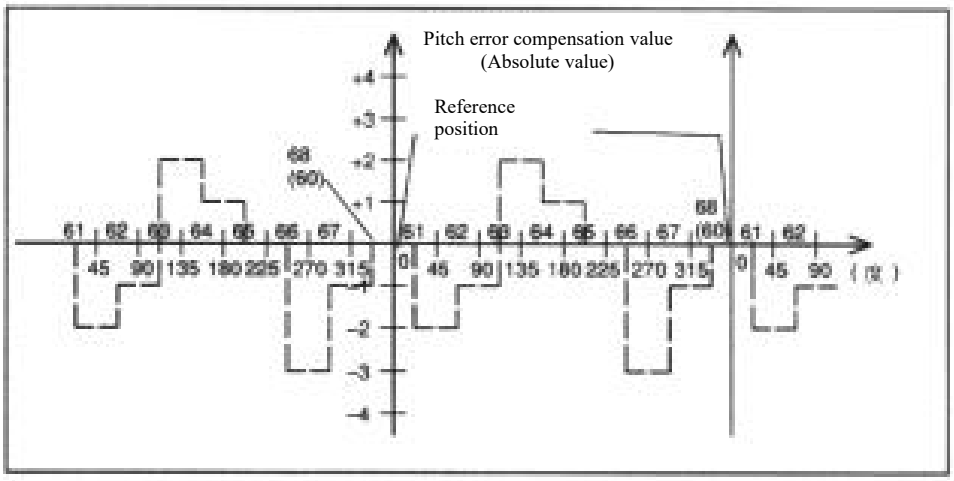

Operation example of compensation

In the example above, after returning to the reference point manually, the movement of the machine:

0, -20, -40, -60, -80, -100, -120, -140, -160, -180, -200, -220,

-220, -200, -180, -160, -140, -120, -100, -80, -60, -40, -20, 0

The measuring data of laser interferometer are as follows:

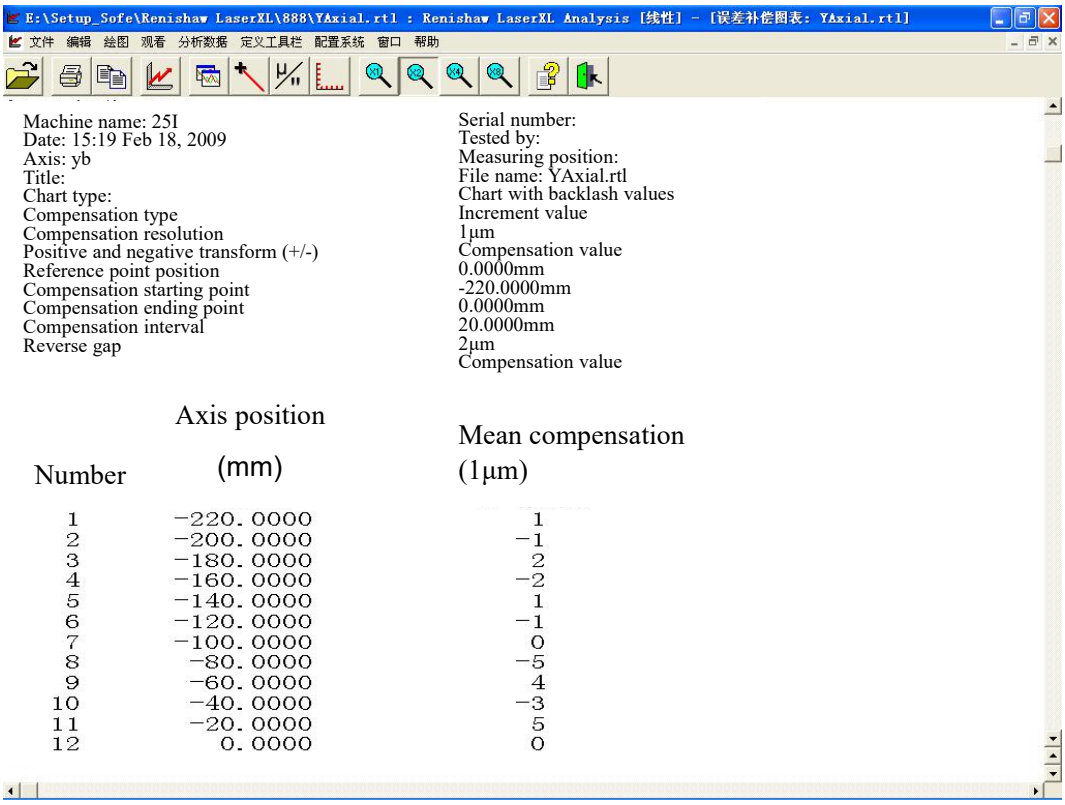

E:\Setup_Sofe\Renishaw LaserXL\888\YAxial.rtl : Renishaw LaserXL Analysis [线性] - [误差补偿图表: YAxial.rtl]

文件 编辑 绘图 观看 分析数据 定义工具栏 配置系统 窗口 帮助

Machine name: 25I
Date: 15:19 Feb 18, 2009
Axis: yb
Title:
Chart type:
Compensation type
Compensation resolution
Positive and negative transform (+/-)
Reference point position
Compensation starting point
Compensation ending point
Compensation interval
Reverse gap

Serial number:
Tested by:
Measuring position:
File name: YAxial.rtl
Chart with backlash values
Increment value
1μm
Compensation value
0.0000mm
-220.0000mm
0.0000mm
20.0000mm
2μm
Compensation value

Number	Axis position (mm)	Mean compensation (1μm)
1	-220.0000	1
2	-200.0000	-1
3	-180.0000	2
4	-160.0000	-2
5	-140.0000	1
6	-120.0000	-1
7	-100.0000	0
8	-80.0000	-5
9	-60.0000	4
10	-40.0000	-3
11	-20.0000	5
12	0.0000	0

The error compensation values are as follows:

Parameter number	Setting	Description
2800.1	0	Bidirectional pitch error compensation: 1: Valid/0: Invalid
2810	11	Pitch error compensation point number corresponding to the machine reference position
2811	1	Farthest pitch error compensation point number on the reverse side when moving in the forward direction
2812	11	Farthest pitch error compensation point number on the forward side when moving in the forward direction
2813	1	Ratio of compensation values
2814	20	Compensation point interval
1068	-	The amount of rotation per rotation of rotating axis

(For unidirectional compensation, the data of the forward compensation point are taken)

Forward point number	12	11	10	9	8	7	6	5	4	3	2	1
Compensation	0	+5	-3	+4	-5	0	-1	1	-2	+2	-1	1

Parameters

	7#	6#	5#	4#	3#	2#	1#	0#
2800							WDIR	SCRW

[Data type] Bit type

[Data scope] 0 or 1

SCRW: Pitch compensation

0: Do not proceed

1: Proceed

WDIR: Pitch compensation selection

0: Unidirectional

1: Bidirectional

2806	Pitch error compensation value homing	0

[Data type] Character type

[Data scope] -32768~32767

Note
Pitch error compensation value (absolute value) of the reference point when moving from the direction opposite to the homing to the reference point.

2810	Pitch error compensation number for each axis reference point	0

[Data type] Character type

[Data scope] 0－1023

2811	Number of thread pitch error compensation point at the far end in negative direction of each axis	0

[Data type] Character type

[Data scope] 0－1023

2812	Number of pitch error compensation point at the far end in the positive direction of each axis	0

[Data type] Character type

[Data scope] 0－1023

Note
1. The set value of this parameter is greater than that of #2810 (reference point pitch compensation number)

2813	Pitch error compensation rate of each axis	0

[Data type] Byte type

[Data unit] %

[Data scope] 1－100

2814	Spacing between pitch error compensation points for each axis	0

[Data type] Double-digit mode

[Data unit] mm

[Data scope] 0－9999.9999

> Notes:
> The pitch error compensation points are equally spaced, minimum spacing = maximum feed speed* (interpolation period/60000) * compensation rate.

1068	Rotation angle per rotation of rotating axis	360

[Data type] Double-digit mode

[Data unit] Degree

[Data scope] 0.001－9999.9999

0811	System interpolation period	2

[Data type] Real number

[Data unit] %

[Data scope] 0~16

> Notes:
> After setting this parameter, the power supply needs to be cut off once before it takes effect.

Important Notice:

1. Compensation value range

The setting range of compensation value is: -1024 × compensation rate (detection unit) ~ + 1024 × compensation rate (detection unit). Compensation rate of each axis can be set separately in parameter #2813, and the value ranges from 0 to 100.

2. Pitch error compensation of rotating axis

For rotating axis, the pitch error compensation point interval must be set as an integer multiple of one-(typically 360°) of the amount of movement per rotation. The sum of the total pitch error compensation values for each rotation must be 0. In addition, the same compensation value must be set at the same position for each rotation.

Compensation data for rotating axis are designed to be within an amount of movement per rotation in the forward direction. If the actual operation is within an amount of movement per rotation in the reverse direction, an amount of movement per rotation must be added to convert to an amount of movement per rotation in the forward direction.

Example:

When setting the compensation value for the -45° position, -45° + 360° = 315° must be set first, and then the compensation value for the -45° position is set on the compensation sequence number corresponding to 315°.

3. Pitch error compensation is not executed

Note: Pitch error compensation is not executed in the following cases:

· Machine does not home after power-on. But it does not include the use of absolute position detector.

· When the interval between pitch error compensation points is 0.

· Compensation position numbers in forward or reverse direction does not range from 0 to 1023.

· The compensation position number does not conform to the following relationship: reverse point number ≤ reference point number < forward point number.

2.3 Bidirectional pitch error compensation

Function and purpose

The compensation function of bidirectional pitch error is to set the compensation amount in the forward and reverse movement directions of the machine respectively, so as to conduct compensation in the forward and reverse movement of the machine respectively, thus improving the compensation accuracy. In addition, when the travel moves in the reverse direction, the compensation amount can be calculated automatically based on the compensation data, and compensation is performed in the same manner as in the conventional storage-type pitch error compensation method. Bidirectional pitch error compensation can reduce the positional error of forward and reverse movement of machine.

Setting data

1. Setting of parameters

The following parameters shall be set for each axis:

Table 2-1 (a)

Parameter number	Description
2800.1	Bidirectional pitch error compensation: 1: Valid/0: Invalid
2806	Pitch error compensation value homing
2810	Pitch error compensation point number corresponding to the machine reference position
2811	Farthest pitch error compensation point number on the reverse side when moving in the forward direction
2812	Farthest pitch error compensation point number on the forward side when moving in the forward direction
2813	Ratio of compensation values
2814	Compensation point interval
1068	The amount of rotation per rotation of rotating axis

2. Pitch error compensation data

The number of pitch error compensation point corresponds to 0 ~ 1023 in the forward direction and 0 ~ 1023 in the reverse direction.

The data setting example assumes that the direction in which it goes home manually is a forward direction (linear axis), that the pitch error is shown in the following figure (Figure 2-1 (b)), and that the setting data is shown in the following table (Table 2-1 (b)).

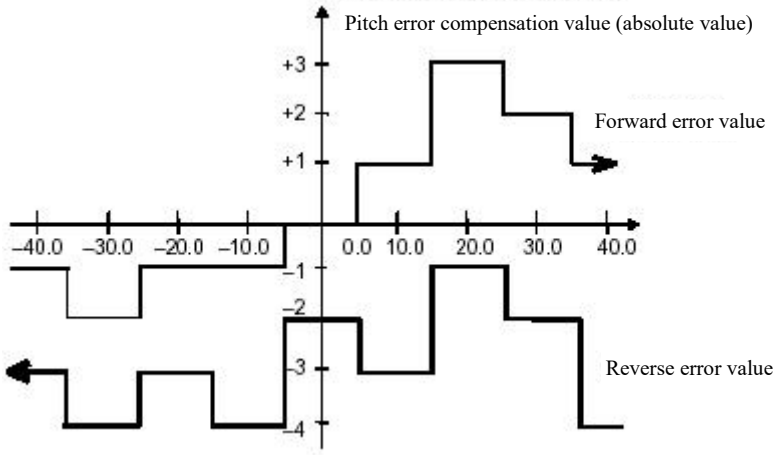

Fig. 2-1 (b)

Table 2-1 (b) Forward error compensation data

Compensation point number	20	21	22	23	24	25	26	27
Compensation value set	-1	+1	0	+1	+1	+2	-1	-1

The pitch error data always set increment when it is viewed from the reverse direction (Figure 2-1 (b) to the left).

Table 2-1 (c) Reverse error compensation data

Compensation point number	30	31	32	33	34	35	36	37
Compensation value set	-1	+1	-1	+2	-1	+2	-1	-2

After the forward compensation data is set, pitch error compensation data for each point in the reverse direction is set.

Reverse pitch error data always set increment when it is viewed from the reverse direction.

Table 2-1 (d)

Parameter number	**Setting**	**Description**
2800.1	1	Bidirectional pitch error compensation: 1: Valid/0: Invalid
2806	-2	Pitch error compensation value homing
2810	23	Pitch error compensation point number corresponding to the machine reference position
2811	20	Farthest pitch error compensation point number on the reverse side when moving in the forward direction
2812	27	Farthest pitch error compensation point number on the forward side when moving in

		the forward direction
2813	1	Ratio of compensation values
2814	10	Compensation point interval
1068	360	The amount of rotation per rotation of rotating axis

3. Operation example of compensation

In the example above, after returning to the reference point manually, the movement of the machine:

0, -20, -40, -60, -80, -100, -120, -140, -160, -180, -200, -220,

-220, -200, -180, -160, -140, -120, -100, -80, -60, -40, -20, 0

Bidirectional compensation:

The measuring data of laser interferometer are as follows:

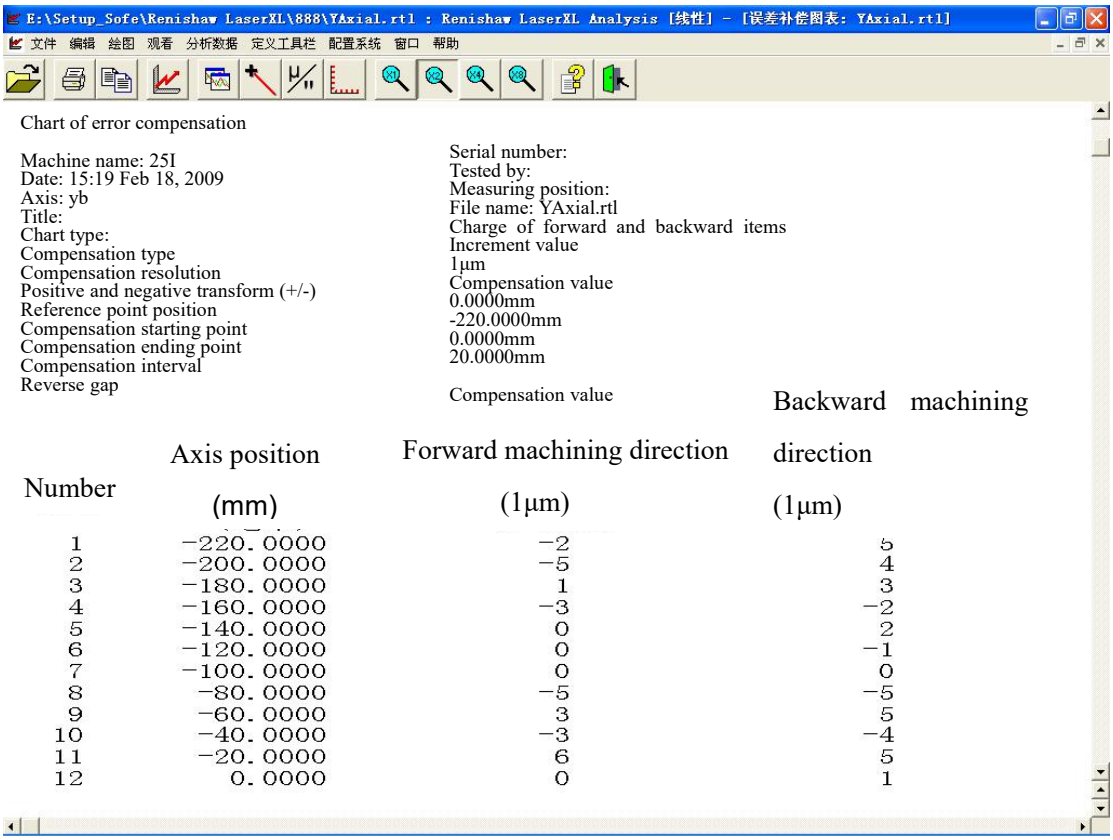

The output of its error compensation value is as follows:

Parameter number	Setting	Description
2800.1	1	Bidirectional pitch error compensation: 1: Valid/0: Invalid
2806	1	Pitch error compensation value homing
2810	11	Pitch error compensation point number corresponding to the machine reference position

2811	1	Farthest pitch error compensation point number on the reverse side when moving in the forward direction
2812	11	Farthest pitch error compensation point number on the forward side when moving in the forward direction
2813	1	Ratio of compensation values
2814	20	Compensation point interval
1068	360	The amount of rotation per rotation of rotating axis

Reverse point number	12	11	10	9	8	7	6	5	4	3	2	1
Compensation	1	+5	-4	+5	-5	0	-1	+2	-2	+3	+4	+5

Forward point number	12	11	10	9	8	7	6	5	4	3	2	1
Compensation	0	+6	-3	3	-5	0	0	0	-3	+1	-5	-2

Chapter 3 Function Description and Commissioning of The PLC With Standard Configuration

This paragraph only describes the factory built-in standard PLC of the system (version MV2.0 ABCS.LD2). The PLC is applicable for 3- to 8-axis NC boring-milling machine and CNC machine with turntable, disk, clamping arm and servo magazine. When machine manufacturers do not use this diagram, the instructions provided by the machine manufacturers shall prevail. The following is the machine operation panel:

1) 8-axis machine operation panel (K0#2=1 must be set for selection of Axis 8 panel)

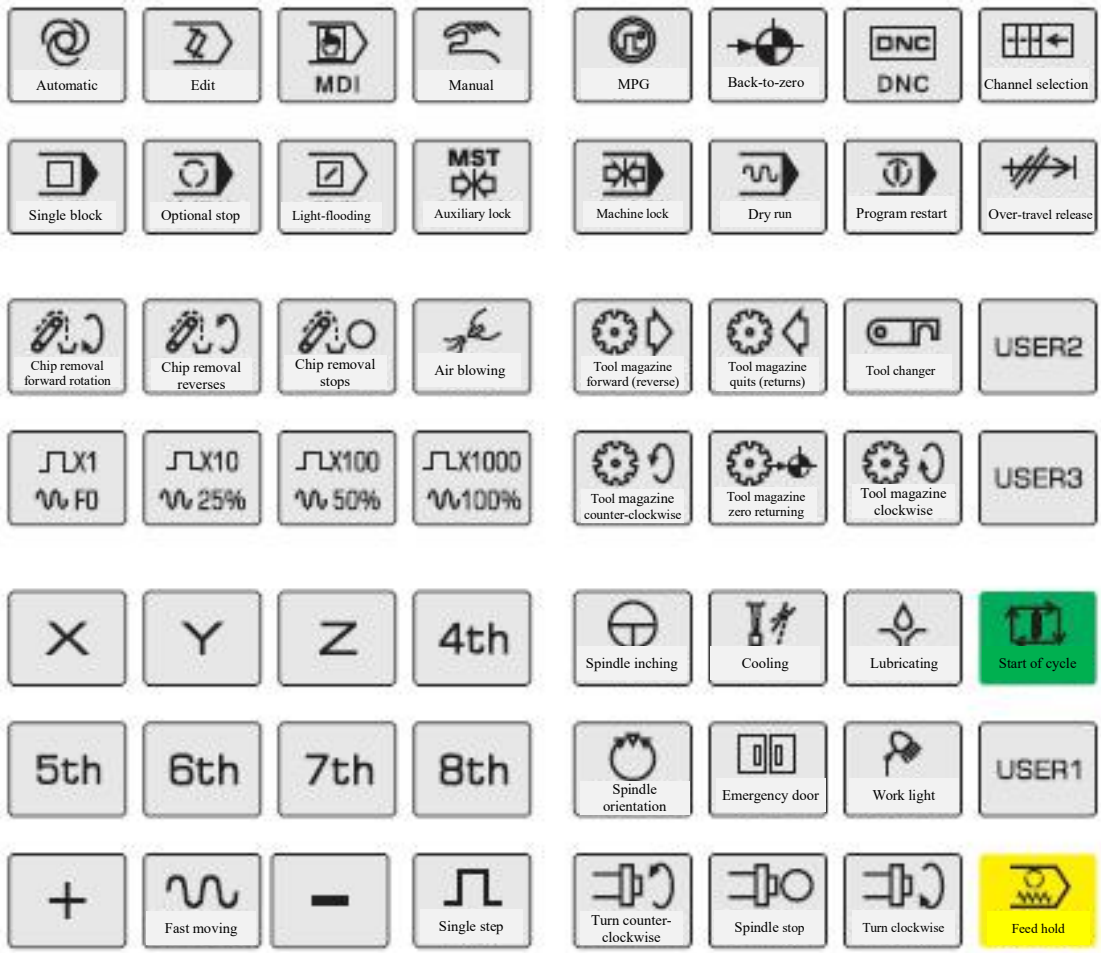

2) 5-axis machine operation panel (K0#2=0 must be set for selection of Axis 5 panel)

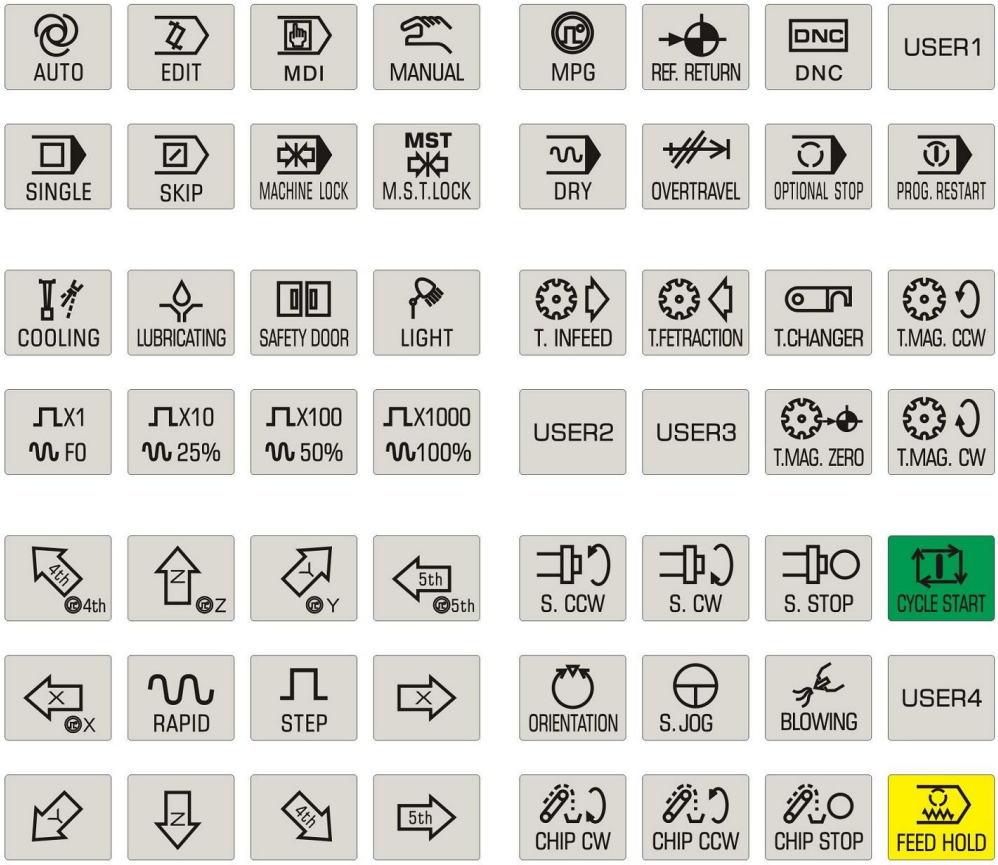

3.1 I/O address definition

3.1.1 Standard machine operation panel inputs X address

Table 3-1

OPERATION PANEL KEY INPUT	PLC ADDRESS	OPERATION PANEL KEY INPUT	PLC ADDRESS
Auto mode	X0.0	-Z	X3.5
Edit mode	X0.1	-4	X3.6
Enter mode	X0.2	-5	X3.7
Manual mode	X0.3	Spindle counter-clockwise	X4.0
MPG mode	X0.4	Spindle stop	X4.1
Zero returning mode	X0.5	Spindle clockwise	X4.2
DNC mode	X0.6	Spindle orientation	X4.3
USER1	X0.7	F0 / 0.001	X4.4
Single block	X1.0	25% / 0.01	X4.5
Light-flooding	X1.1	50% / 0.1	X4.6
Machine lock	X1.2	100% / 1	X4.7
Auxiliary lock	X1.3		

OPERATION PANEL KEY INPUT	PLC ADDRESS	OPERATION PANEL KEY INPUT	PLC ADDRESS
+4	X1.4		
+Z	X1.5		
-Y	X1.6	Tool magazine forward	X5.3
+5	X1.7	Tool magazine back	X5.4
Dry run	X2.0	Tool changer	X5.5
Over-travel release	X2.1	Tool magazine counter-clockwise	X5.6
Optional stop	X2.2	Tool magazine zero returning	X5.7
Program restart	X2.3	Tool clamping/tool releasing	X6.0
+X	X2.4	USR2	X6.1
Fast	X2.5	USR3	X6.2
Single-step	X2.6	USR4	X6.3
-X	X2.7	Feed hold	X6.4
Cooling	X3.0	Cycle start	X6.5
Lubricating	X3.1	Tool magazine clockwise	X6.6
Chip removal	X3.2	Feed rate can indicate 24th gear at maximum (no output light)	X7.0-X7.4
Work light	X3.3	Spindle rate, presenting 16th gear at maximum (no output light)	X8.0-X8.3
+Y	X3.4	Emergency stop	X8.4

3.1.2 Standard machine operation panel outputs Y address

Table 3-2

OPERATION PANEL OUTPUT	PLC ADDRESS	OPERATION PANEL OUTPUT	PLC ADDRESS
Automatic Key Indicator	Y0.0	-Z Key Indicator	Y3.5
Edit Key Indicator	Y0.1	-4 Key Indicator	Y3.6
Enter Key Indicator	Y0.2	-5 Key Indicator	Y3.7
Manual Key Indicator	Y0.3	Spindle Counter-clockwise Key Indicator	Y4.0
MPG Key Indicator	Y0.4	Spindle stop key indicator	Y4.1
Zero Returning Key Indicator	Y0.5	Spindle Clockwise Key Indicator	Y4.2

OPERATION PANEL OUTPUT	PLC ADDRESS	OPERATION PANEL OUTPUT	PLC ADDRESS
DNC Key Indicator	Y0.6	Spindle Orientation Key Indicator	Y4.3
USER1 Key Indicator	Y0.7	F0/0.001 Key Indicator	Y4.4
Single Block Key Indicator	Y1.0	25%/0.01 Key Indicator	Y4.5
Light-flooding Key Indicator	Y1.1	50%/0.1 Key Indicator	Y4.6
Machine Lock Key Indicator	Y1.2	100%/1 Key Indicator	Y4.7
Auxiliary Lock Key Indicator	Y1.3	Tool Magazine Forward Key Indicator	Y5.3
+4 Key Indicator	Y1.4	Tool Magazine Back Key Indicator	Y5.4
+Z Key Indicator	Y1.5	Tool Changer Key Indicator	Y5.5
-Y Key Indicator	Y1.6	Tool Magazine Counter-clockwise Key Indicator	Y5.6
+5 Key Indicator	Y1.7	Tool Magazine Zero Returning Key Indicator	Y5.7
Dry Run Key Indicator	Y2.0	Tool clamping/tool releasing key indicator	Y6.0
Over-travel Release Key Indicator	Y2.1	USR2 Key Indicator	Y6.1
Optional Stop Key Indicator	Y2.2	USR3 Key Indicator	Y6.2
Program Restart Key Indicator	Y2.3	USR4 Key Indicator	Y6.3
+X Key Indicator	Y2.4	Feed Hold Key Indicator	Y6.4
Quick Key Indicator	Y2.5	Cycle Start Key Indicator	Y6.5
Single-step Key Indicator	Y2.6	Tool Magazine Clockwise Key Indicator	Y6.6
-X Key Indicator	Y2.7	X-axis Reference Point Indicator	Y7.0
Cooling Key Indicator	Y3.0	Y-axis Reference Point Indicator	Y7.1
Lubricating Key Indicator	Y3.1	Z-axis Reference Point Indicator	Y7.2
Chip Removal Key Indicator	Y3.2	Axis 4 Reference Point Indicator	Y7.3
Work Light Key Indicator	Y3.3	Axis 5 Reference Point Indicator	Y7.4
+Y Key Indicator	Y3.4	System alarming	Y7.6

3.1.3 MPG Signal Input X Address

Table 3-3

MPG Signal Input	PLC address
STP (MPG Emergency Stop Signal)	X121.0
X100 (MPG Feed Rate)	X120.0
X10 (MPG Feed Rate)	X120.1
X1 (MPG Feed Rate)	X120.2
H5 (Axis 5 selection)	X120.3
H4 (Axis 4 selection)	X120.4
HZ (Axis Z selection)	X120.5
HY (Axis Y selection)	X120.6
HX (Axis X selection)	X120.7

3.1.4 MPG signal outputs Y address

Table 3-4

MPG Signal Light Output	Y120.0

3.1.5 I/O unit inputs X address

A: Turntable type tool magazine, **B:** Disk manipulator tool magazine, **C:** Turret tool magazine, ● Symbol represents functions that are labeled with table text. "I" represents the input signal, and "O" represents the output signal.

Terminal No.	**PLC address**	**Signal name**	**Function of signals**	A	B	C	I/O
X9.0	X9.0	* DECX (fixed)	Deceleration signal for Axis X homing	●	●	●	I
X9.1	X9.1	* DECY (fixed)	Deceleration signal for Axis Y homing	●	●	●	I
X9.2	X9.2	* DECZ (fixed)	Deceleration signal for Axis Z homing	●	●	●	I
X9.3	X9.3	* DEC4 (fixed)	Deceleration signal for Axis 4 homing	●	●	●	I
X9.4	X9.4	* DEC5 (fixed)	Deceleration signal for Axis 5 homing	●	●	●	I
X9.5	X9.5						I
X9.6	X9.6						I
X9.7	X9.7						I

X10.0	X10.0						I
X10.1	X10.1						I
X10.2	X10.2						I
X10.3	X10.3						I
X10.4	X10.4						I
X10.5	X10.5						I
X10.6	X10.6						I
X10.7	X10.7						I
X11.0	X11.0	LUB.ALM	Lubrication pump alarm input signal	●	●	●	I
X11.1	X11.1	DOOR.ALM	Protective door alarm input signal	●	●	●	I
X11.2	X11.2	HYPUP.ALM	Hydraulic pump overload input signal	●	●	●	I
X11.3	X11.3	AIRPRE.ALM	Air pressure detection alarm input signal	●	●	●	I
X11.4	X11.4	CLNM.ALM	Cooling pump motor overload alarm input	●	●	●	I
X11.5	X11.5	CHIPM.ALM	Chip remover motor overload input signal	●	●	●	I
X11.6	X11.6	MGPLA.ALM	Tool carrier motor overload input signal	●	●	●	I
X11.7	X11.7	ARM.ALM	Manipulator motor overload input signal		●		I
X12.0	X12.0	GR1.M	Spindle 1st gear (in-place detection)	●	●	●	I
X12.1	X12.1	GR2.M	Spindle 2nd gear (in-place detection)	●	●	●	I
X12.2	X12.2	GR3.M	Spindle 3rd gear (in-place detection)	●	●	●	I
X12.3	X12.3	GR4.M	Spindle 4th gear (in-place detection)	●	●	●	I
X12.4	X12.4	LUBPRE.I	Lubrication pump pressure detection	●	●	●	I
X12.5	X12.5	TRLCK.I	Tool releasing (in-place detection)	●	●		I
X12.6	X12.6	TCLCK.I	Tool clamping (in-place detection)	●	●		I
X12.7	X12.7	CKST	Tool clamping/tool releasing button	●	●		I

X13.0	X13.0	4UCLP.I	Axis 4 releasing in-place detection	●	●	●	I
X13.1	X13.1	4CLP.I	Axis 4 clamping in-place detection	●	●	●	I
X13.2	X13.2						I
X13.3	X13.3	SCOVL.I	Spindle cooling system overload input signal	●	●	●	I
X13.4	X13.4	5UCLP.I	Axis 5 releasing in-place detection	●	●	●	I
X13.5	X13.5	5CLP.I	Axis 5 clamping in-place detection	●	●	●	I
X13.6	X13.6						I
X13.7	X13.7						I
X14.0	X14.0	T-BARE	Tool carrier in place	●		●	I
X14.1	X14.1	TZER.I	Tool magazine back-to-zero signal	●	●		I
X14.2	X14.2	TCN.I	Tool counting signal	●	●	●	I
X14.3	X14.3	TFN.I	Tool magazine forward in place/tool-case vertical	●	●		I
X14.4	X14.4	TBK.I	Tool magazine backward in place/tool-case horizontal	●	●		I
X14.5	X14.5	ATCZERO.I	ATC origin/C magazine tool changing area signal		●	●	I
X14.6	X14.6	ATCHOLD.I	ATC tool holding		●		I
X14.7	X14.7	ATCSTOP.I	ATC stop/C magazine tool changing enabling signal		●	●	I

3.1.6 I/O unit outputs Y address

A: Turntable type tool magazine, **B:** Disk manipulator tool magazine, **C:** Turret tool magazine, ● Symbol represents functions that are labeled with table text. "I" represents the input signal, and "O" represents the output signal.

Terminal No.	PLC address	Signal name	Function of signals	A	B	C	I/O
Y8.0	Y8.0	CLN.O	Cooling pump (coolant)	●	●	●	O
Y8.1	Y8.1	MGFR.O	Tool magazine forward/tool-case vertical	●	●		O
Y8.2	Y8.2	MGBK.O	Tool magazine backward/tool-case horizontal	●	●		O
Y8.3	Y8.3	AOFF.O	Automatic power-off	●	●	●	O
Y8.4	Y8.4	TRL.M	Tool releasing	●	●		O

Y8.5	Y8.5	MGCW.O	Magazine forward	●	●	●	O
Y8.6	Y8.6	MGCCW.O	Magazine reverse	●	●	●	O
Y8.7	Y8.7	ARM.O	Manipulator arm motor		●		O
Y9.0	Y9.0	LUB.O	Lubricating pump output	●	●	●	O
Y9.1	Y9.1	OR.T	Over-travel release	●	●	●	O
Y9.2	Y9.2	M03	Spindle forward	●	●	●	O
Y9.3	Y9.3	M04	Spindle reverse	●	●	●	O
Y9.4	Y9.4	RED.L	Lighthouse red light	●	●	●	O
Y9.5	Y9.5	YEL. L	Lighthouse yellow light	●	●	●	O
Y9.6	Y9.6	GRE. L	Lighthouse green light	●	●	●	O
Y9.7	Y9.7	HYPR.O	Hydraulic oil pump	●	●	●	O
Y10.0	Y10.0	GR1.O	Spindle 1st gear	●	●	●	O
Y10.1	Y10.1	GR2.O	Spindle 2nd gear	●	●	●	O
Y10.2	Y10.2	GR3.O	Spindle 3rd gear	●	●	●	O
Y10.3	Y10.3	GR4.O	Spindle 4th gear	●	●	●	O
Y10.4	Y10.4	4UCLPO	Axis 4 releasing	●	●	●	O
Y10.5	Y10.5	4-CLPO	Axis 4 clamping	●	●	●	O
Y10.6	Y10.6	5UCLPO	Axis 5 releasing	●	●	●	O
Y10.7	Y10.7	5-CLPO	Axis 5 clamping	●	●	●	O
Y11.0	Y11.0	LAMP.O	Machine operation light	●	●	●	O
Y11.1	Y11.1	WASH.O	Chip flushing valve	●	●	●	O
Y11.2	Y11.2	SPAIRT.O	Spindle gas seal	●	●	●	O
Y11.3	Y11.3	CLN-2.O	Workpiece air cooling	●	●	●	O
Y11.4	Y11.4	CHIP1.CW	Chip remover 1 forward rotation	●	●	●	O
Y11.5	Y11.5	CHIP1.CCW	Chip remover 1 reverse rotation	●	●	●	O
Y11.6	Y11.6		Tool carrier brake			●	O
Y11.7	Y11.7	Lock	Door interlock	●	●	●	O

3.2 Emergency stop

When the G8.4 signal is disconnected to 0, the system enters an emergency stop state with the standard factory PLC address X8.4 being 0.

Emergency stop condition: Abnormal communication of system panel; press the emergency stop switch.

After the automatic power-off function of the system is turned on, the system shall stop suddenly and then cut off the power before starting the automatic power-off.

3.3 Hardware over-travel

K9.0=1 when hard over-travel detection of all axes is shielded, while K9.0=0 when it is unshielded.

When K9.0=0:

K9.4=1 when hard over-travel of Axis 4 is shielded, while K9.5=1 when that of Axis 5 is shielded.

K9.4=0 when hard over-travel of Axis 4 is not shielded, while K9.5=0 when that of Axis 5 is not shielded.

Note: Please keep the hard over-travel on the machine valid to ensure the safety of the machine.

3.4 Over-travel release

When the over-travel releasing key is pressed, I/O unit Y9.1 is output, and the user can connect the external relay for closing the emergency stop chain disconnected due to over-travel.

3.5 Single-step function

When the machine is not equipped with MPG, the feed axis can be operated like MPG by selecting a single-step feed mode

The power-on system single-step length machining is the default "0.1" gear.

3.6 Tricolor light control

Control signals:

Address	Function description	Remarks
Y9.4	Red light output	The system is under alarm state
Y9.5	Yellow light output	The system is under operational readiness state
Y9.6	Green light output	The system is under automatic operation

3.7 Lubrication pump control

3.7.1 Automatic lubrication

Counter C000: [Pre-set Value] sets the stop interval time of automatic lubrication pump in minutes.

Counter C000: [Current Value] sets the fuel supply time of the automatic lubrication pump in seconds.

Counter C040: [Current Value] displays the executed lubrication pump stop interval time in minutes.

When neither C000 [Current Value] nor [Pre-set Value] is not set to 0, the lubrication pump starts to be operated after interval C000 [Pre-set Value] sets time.

When the lubrication pump runs automatically:

1. If K1.1=0, (without lubrication pressure detection switch), the pump work counter C000 [Current Value] will stop after setting time;

2. If K1.1=1, (with lubrication pressure detection switch), the pump shall be operated until the X12.4 pressure switch is operated and then stopped for 5 seconds delay; (PLC diagnostic address X12.4=1 when pressure is reached, if PLC diagnostic address X12.4=0 when pressure is reached, the ladder diagram X12.4 needs to be modified to trigger logic invert)

3. If the pressure is not reached within the time set by the counter C000 [Current Value], alarm 2032 will be given.

3.7.2 Manual lubrication

If K1.1=1, (with lubrication pressure detection switch), the pump will work until the X12.4 pressure switch acts and then stop after a delay of 2.5 seconds;

If K1.1=0, when the setting value of C000 [Current Value] is not 0, the pump operation stops after [Current Value] sets time. If the counter C1 [Current Value] is set to 0, the lubrication pump stops when the lubrication button is released.

3.7.3 Lubrication interval time accumulation and alarm

The working interval timing of lubrication pump is memorized; thus the system will save the current stopping time after power-off, and cumulative timing will continue after power-on again; cumulative timing stops when Emergency Stop or [Pre-set Value] and [Current Value] is set to 0.

1. In emergency stop, reset and lubrication alarm, the lubrication pump does not output anything, and manual lubrication will not affect the automatic lubrication timing.

2. The system will give an alarm of PL2043: PLC parameter setting error when the current value of C040 is greater than the pre-set value of C000.

3. K11.0 is the alarm logic selection signal for the lubrication alarm input signal X11.0 (i.e., selecting 1 for alarm or 0 for alarm), and the lubrication pump will not output anything when giving an alarm.

Control signals:

Address	Function description	Remarks
X3.1	Lubrication key	
Y3.1	Lubrication indicator	
Y9.0	Lubricating pump output	
X11.0	Lubrication alarm input signal	
X12.4	Lubrication pressure detection signal	
K1.1	Whether lubrication pressure is detected	0: Not detected 1: Detected
K11.0	Selection of lubrication alarm signal	0: Normally open 1: Normally closed

3.8 Cooling pump control

In any operation mode, the output state of the cooling pump is reversed every time the

key on the operation panel is pressed. Command under automatic mode: M8 cooling pump on, M9 cooling pump off. Output shutoff in cooling pump overload alarm, emergency stop and reset.

When the cooling pump output is in automatic operation, the protective door alarm cooling pump output is off; after the protective door is closed, the cooling pump is automatically on; when there is no protective door alarm, the cooling pump can be operated manually.

Relevant input and output signals and K parameters:

Address	Function description	Remarks
X3.0	Cooling key	
Y3.0	Cooling key indicator	

Y8.0	Cooling pump control output	
X11.4	Cooling pump overload	
K11.4	Selection of cooling alarm signal	0: Normally open 1: Normally closed

3.9 Hydraulic pump control

1. When the system is powered on and the emergency stop is released, the hydraulic pump will output some and become the working state.

2. When pressing the emergency stop button or hydraulic pump gives an alarm, the hydraulic pump output is turned off, and the output will be resumed after the alarm and emergency stop are released.

Relevant input and output signals and K parameters:

Address	Function description	Remarks
Y9.7	Hydraulic pump control output	
X11.2	Hydraulic pump overload	
K11.2	Selection of hydraulic alarm signal	0: Normally open 1: Normally closed

3.10 Workpiece blowing control

In any operation mode, the blowing output state of the workpiece is reversed every time the

key on the operation panel is pressed.

Commanded under automatic mode: M7 workpiece is air-cooling is on, and M9 workpiece air-cooling is off. Output shutoff in emergency stop and reset.

Relevant input and output signals:

Address	Function description	Remarks
X6.1	Workpiece blowing key	USER2 key
Y6.1	Workpiece blowing indicator	USER2 key
Y11.3	Workpiece blowing control output	

3.11 Chip remover control

3.11.1 Manual operation of chip removal

In any mode of operation, the chip removal output state is reversed every time the chip removal key on the operation panel is pressed.

3.11.2 Two options for automatic chip removal

1. M code command for chip removal

When K0.7=0 (automatic chip removal start/stop is invalid), M35 chip remover forward turns on, M34 chip remover reverse turns on, and M36 chip remover forward turns off. Output shutoff in chip remover overload alarm and emergency stop.

2. Time control automatically starts and stops chip removal

When K0.7=1 (automatic start-stop chip removal is valid), T006 shall be set as chip remover forward rotation time and T004 as chip remover stop time. After the system starts the program in automatic mode, MDI mode or DNC

mode, the chip remover shall be automatically started and stopped according to the start-stop time set by the timer.

When K0.7=1 (automatic start-stop chip removal is valid), the chip removal key on the panel is only used as reverse inching during maintenance, that is, under manual mode, the chip removal key is pressed, and the chip remover reverses, while the key is released, the chip remover stops.

Related signals of chip remover:

Address	Function description	Remarks
X3.2	Forward rotation key of chip remover	
Y3.2	Forward rotation indicator of chip remover	
Y11.4	Forward rotation output of chip remover	Command M35
Y11.5	Reverse output of chip remover	Command M34
X11.5	Chip remover overload	Command M36 (Stop)
K11.5	Selection of chip remover alarm signal	0: Normally open 1: Normally closed
K0.7	Fully automatic start-stop of chip removal	1: Valid 0: Invalid

3.12 Work light control

In any operation mode, the work light output state is reversed every time the work light key on the operation panel is pressed.

Related signals:

Address	Function description	Remarks
X3.3	Work light key	
Y3.3	Work light key indicator	
Y11.0	Working light control output	

3.13 Automatic power-off function of the system

1. K parameter that must be set (K1.4=1)

2. Operation method for automatic power-off

When the USER4 key is pressed, the USER4 key indicator is on, and it is ready for automatic power-off.

3. Description of control flow for automatic power-off

When the automatic machining program of the machine is finished, the system signal F9.4=1 is output after executing the M30 program command, then it is delayed for 2 seconds to trigger an emergency stop of the system for 60 seconds delay, and the system I/O unit Y8.3 is output to trigger the power-off relay of the machine to be switched on to power off the system.

3.14 Protective door and door lock control function

1. Function setting of protective door K1.2=1

After the protective door function is turned on, the protective door is opened when the system runs the machining program in automatic mode or DNC mode, the spindle rotates normally (whether to stop the spindle or not can be

selected by K parameter), the feed axis enters into a pause state, the cooling pump is shut down immediately, and an alarm PL1001 is given (K parameter can select to open the door without giving an alarm but only to limit the speed of spindle and feed axis). When the protective door is closed, an alarm will be automatically released, the cooling pump immediately resumes output, and pressing the cycle start key can continue to execute the machining program.

2. Selection of opening door and stopping spindle (K7.5)

After the protective door function is turned on, if K7.5=1 is set, when the program is automatically operated, the protective door is opened, the spindle stops immediately, the feed axis enters a pause state, the cooling pump closes, and alarm PL1001 is given. After the door is closed, the alarm will be automatically released, the cooling pump resumes start immediately, but the spindle does not resume rotation automatically, thus the spindle needs to be restarted.

3. Selection of speed limit for door opening (K1.7)

After the protective door is opened, if K1.7=1 (speed limit for door opening) and K7.5=0 (door opening but not stopping spindle) automatic operation program is set, the protective door is opened. Except that the cooling pump stops, the system does not give an alarm, but only limits the spindle speed and the feed rate of the feed axis. The safe speed of the spindle is set by parameter #5118, while that of the feed axis is set by parameter #1260.

Control signals:

Address	Function description	Remarks
X11.1	Protective door alarm input signal	
Y11.7	Door interlock opening	
K1.2	Protective door function	0: Open 1: Close
K7.5	Protective door gives an alarm to close the spindle or not	0: Do not close 1: Close
K11.1	Protective door alarm signal invert	0: Normally open 1: Normally closed
K1.7	Whether the speed is limited when opening the door	0: No speed limit/1: Speed limit

3.15 External MPG box function

When the external MPG is connected for use according to the connection diagram, the external MPG function will be automatically turned on, or the parameter K2.0 can be set to "1" to open the external MPG, while K2.0 can be set to "0" to close the external MPG.

A work indicator on MPG is on when an external MPG axis selects signal connection, and forward and reverse direction key indicator of the corresponding axis on the machine operation panel is on, indicating that the axis has been controlled by MPG; when the rate signal on the external MPG box is connected, the corresponding amount of movement indication is also provided on the machine operation panel.

MPG box rate key	×1	×10	×100	×1
Operation panel indication	F0 0.001	25% 0.01	50% 0.1	100% 1
Corresponding amount of movement	0.001	0.01	0.1	1

Note: The emergency stop button on the external MPG is invalid when the function of the external MPG is not turned on.

Control signals:

Address	Function description	Remarks
X121.0	MPG emergency stop	
X120.0	X100 (MPG Feed Rate)	
X120.1	X10 (MPG Feed Rate)	
X120.2	X1 (MPG feed rate)	
X120.3	Axis 5 selection	
X120.4	Axis 4 selection	
X120.5	Axis Z selection	
X120.6	Axis Y selection	
X120.7	Axis X selection	
Y120.7	MPG Signal Light Output	
K2.0	External MPG function	0: Off 1: On

3.16 Selection of two control modes for fast rate

3.16.1 Panel rate key control

When parameter K2.2 is set to "0", the panel key control is valid.

The rate of the manual fastness and G00 is controlled by F0, 25%, 50%, 100% keys on the machine operation panel, and the initial value of rate power-on is 50%.

3.16.2 Feed rate knob control

When parameter K2.2 is set to "1", the feed rate knob control is valid.

The rate of the manual fastness and G00 is controlled by the cutting feed rate switch on the panel which simultaneously controls the rate of cutting feed and fast-moving. In this case, the fast-moving rate adjustment ranges from 0% to 100%, and the adjustment increment is 10%. When the rate exceeds 100%, the fast rate is treated as 100%, and the cutting feed rate is treated as the actually selected number.

When K2.2=0, setting K2.1=1 stops fast-moving when the feed rate is adjusted to 0.

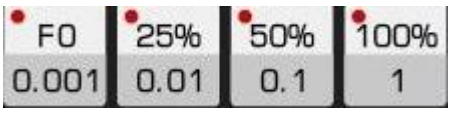

K2.2=0 K2.2=1

3.17 Relevant functions of spindle

3.17.1 Polarity selection for spindle analog voltage

1. Bipolar. The spindle control analog voltage output is ±10V at K2.7=0.

2. Unipolarity. When K2.7=1, the spindle control analog voltage output is 0 ~ 10V.

3.17.2 Selection of K parameter related to spindle releasing and clamping tool

1. Selection of detection switch with/without spindle releasing and clamping tool

Set K7.3=0 when there is a detection switch,

Set K7.3=1 when there is no detection switch,

K7.3=1 is invalid when a tool magazine is selected.

2. Whether the tool releasing detects the selection of spindle zero-speed signal

K7.1=1 when spindle zero-speed signal is not detected

K7.1=0 when spindle zero-speed signal is detected

3. Self-locking selection of manual button of spindle releasing and clamping tool

K7.4=1 when there is self-locking of spindle releasing and clamping tool;

K7.4=0 when there is no self-locking of spindle releasing and clamping tool.

3.18 Orientation of spindle

When the machine is equipped with a servo spindle driver, the system outputs a directional start signal to the servo driver by pressing the spindle orientation key on the operation panel in a manual mode, or by automatically inputting a mode command and running M19. When the driver receives the directional start signal and the servo enable signal from the system, the spindle servo motor directional action will be performed according to the pre-set directional speed and position information on the driver. After the spindle moves to the set position, the spindle stops rotating and sends the directional completion signal to the control system. After the CNC receives the directional completion signal, M19 ends.

Start condition of spindle orientation:

1. In the spindle clamping tool confirmation state.
2. Back state of tool magazine for turntable type tool magazine.
3. Manipulator zero state for manipulator tool magazine.
4. State of machine outside the tool change area for turret tool magazine.

3.19 Spindle rigid tapping function

When it automatically inputs mode command and runs M29, CNC immediately outputs rigid tapping start signal. After entering rigid tapping state, the system executes displacement and linkage tapping action according to G84 fixed cycle command program written by user. Perform G80 or M39 to exit the rigid tapping state.

Allowable conditions for rigid tapping

1. In the spindle clamping tool confirmation state.
2. Back state of tool magazine for turntable type tool magazine.
3. Manipulator zero state for manipulator tool magazine.
4. State of machine outside the tool change area for turret tool magazine.

3.20 Spindle gear shift (M/T gear shift selection for digital/analog spindle)

3.20.1 M gear shift (S*** rotation speed value automatically determines gear)

1. M automatic gear shift function

M spindle gear shift can handle automatic and manual shift control of 3 mechanical gears at most (this system).

When commanding M3S**** (or M4S****), CNC automatically determines which gear the S*** command speed belongs to and whether the spindle gear signal needs to be shifted based on the spindle gear speed parameter #5120, #5121, #5122, #5130, #5131 set by the user.

Example:

When the rotation speed of S*** command is consistent with the current gear of the machine detected by the I/O unit X signal; the system starts directly at the speed commanded by S*** and remains the previous gear output Y signal unchanged.

When the rotation speed of S*** command is inconsistent with the current spindle gear of the machine detected by the I/O unit X signal; the system first outputs the spindle stop signal and cuts off the original gear output signal. After the spindle zero-speed signal is detected, the system outputs the spindle forward and reverse low-speed wiggling signal and the new gear output signal, and drives the solenoid valve installed on the machine side to push the gear shifting mechanism to shift the variable gear. When the gear shift in-place signal is detected, CNC stops the spindle forward and reverse wiggling output and automatically starts the spindle according to the new commanded spindle speed.

Once the gear Y signal is output, the memory function is provided after power-off. After power-on again, the output state of the gear before power-off is kept unchanged.

2. Related K parameter of M automatic gear shift:

K7.2=1 (S code gear shift is valid);

K8.2=0 (asynchronous motor gear shift is invalid) K7.4=0 (manual gear shift is invalid).

3. Related NC parameter of M automatic gear shift:

#5000.6=0 (M gear shift is valid)

#5110 motor speed when spindle gear shifts

#5120 Maximum spindle speed for gear 1

#5121 Maximum spindle speed for gear 2

#5122 Maximum spindle speed for gear 3

#5130 Spindle speed at gear 1- gear 2 switching point

#5131 Spindle speed at gear 2- gear 3 switching point

#5132 Spindle speed at gear 3- gear 4 switching point

5160 The number of gear teeth on the spindle side at gear 1

#5161 The number of gear teeth on the spindle side at gear 2

#5162 The number of gear teeth on the spindle side at gear 3

#5165 The number of spindle motor teeth at gear 1

#5166 The number of spindle motor teeth at gear 2

#5167 The number of spindle motor teeth at gear 3

4. Description of M manual gear shift function and K parameter setting

Related K parameter of M manual gear shift:

K7.2=1 (S code gear shift is valid)

K7.4=1 (S code manual gear shift is valid)

K8.2=0 (asynchronous motor gear shift is invalid)

When commanding M3 S**** (or M4 S****), CNC determines which gear the S*** command speed belongs to according to the spindle gear rotation speed parameters #5120, #5121, #5122, #5130, #5131 set by the user, and compares the S*** command speed with the current spindle gear (X signal) detected by the I/O unit to determine whether the command gear is consistent with the current spindle gear. If the S*** command gear is consistent with the detected gear, the spindle is started at the new S*** speed. If the S*** command gear is inconsistent with the detected gear, the spindle enters forward and reverse low-speed wiggling state and waits for manual operation

of switching the shift gear. After the system detects that the gear shift is in place, it will exit the spindle low-speed wiggling state and stops the spindle. When the loop start button is pressed again, the spindle starts at the new command speed.

3.20.2 T gear shift (M code assigned gear)

1. Description of T gear shift function

Spindle T gear shift can handle automatic and manual shifting control of 4 spindle gears (this system).

This type of spindle gear is assigned by the operator using M code or manual operation. Four M codes correspond to four (or more) sets of Y signal outputs and drive the external solenoid valve to push the gear shift and realize the mechanical gear shift of the spindle. Example:

M41 (spindle 1st gear)

M3 S*** (spindle forward S*** rotation speed)

M42 (spindle 2nd gear)

M4 S*** (spindle reverse S*** rotation speed)

2. Parameters to be set for T gear shift

#5000.6=1 (T gear shift is valid)

#5110 motor speed when spindle gear shifts

#5120 Maximum spindle speed for gear 1

#5121 Maximum spindle speed for gear 2

#5122 Maximum spindle speed for gear 3

#5123 Maximum spindle speed for gear 4

5160 The number of gear teeth on the spindle side at gear 1

#5161 The number of gear teeth on the spindle side at gear 2

#5162 The number of gear teeth on the spindle side at gear 3

#5163 The number of gear teeth on the spindle side at gear 4

#5165 The number of spindle motor teeth at gear 1

#5166 The number of spindle motor teeth at gear 2

#5167 The number of spindle motor teeth at gear 3

#5168 The number of spindle motor teeth at gear 4

3.20.3 Spindle three-phase asynchronous motor speed change (two-speed/three-speed winding switch)

1. Description of the three-phase asynchronous gear shift function

This type of spindle gear shift is realized by driving the relay or AC contactor on the machine side through the Y signal output from the I/O unit of the system, and switching the coil winding of the spindle three-phase asynchronous motor to realize the gear shift of the spindle.

The commands are as follows:

M3 S1 (spindle forward 1st gear)

M4 S2 (spindle reverse 2nd gear)

M5 (or S0) (spindle stops)

……..

At command S1, the Y 1st gear signal corresponding to the I/O unit is output

At command S2, the Y 2nd gear signal corresponding to the I/O unit is output

At command S3, the Y 3rd gear signal corresponding to the I/O unit is output

At command S0, the spindle gear signals of the I/O unit are not output

2. Parameters to be set for three-phase asynchronous motor gear shift

K7.2=0 (analog digital spindle S code gear shift is invalid);

K8.2=1 (asynchronous motor gear shift is valid)

K7.4=0 (manual gear shift is invalid)

#5000.6=0

3.20.4 No gear digital/analog spindle control

When the spindle is a servo motor or a variable frequency motor and there is no mechanical gear shift control, after the system parameters are set:

Command: M3 S***; (command speed) can realize forward rotation of servo motor or variable frequency motor.

Directive: M4 S***; (command speed) can realize reverse rotation of servo motor or variable frequency motor.

Command: M5 or S0 can stop spindle rotation

3.20.5 Check the spindle speed arrival signal in cutting

PLC parameter K0.1 sets whether the spindle speed arrival signal is checked during cutting (K0.1=0 check, K0.1=1 do not check). When it is set to check, CNC command converts from G0 to G01 state, and CNC does not receive the spindle speed arrival signal, feeding is stopped to wait for the spindle speed arrival signal and prevent the frequency conversion spindle from accidentally stopping in machining and the feed axis operation from damaging the tool and the machine.

3.21 Selection of indexing table and CNC turntable (Axis 4 only)

3.21.1 Indexing table

1. Characteristics of indexing table

In indexing table mode, the operation of Axis 4 rotation in manual and handwheel mode is invalid (except manual homing), it can only rotate in automatic/MDI mode command, and the commanded rotation angle value must be the angle of the integral multiple of minimum indexing unit set by parameter #1931, otherwise, the system will give a command error alarm.

2. Parameters to be set when selecting the indexing table

#1030.7=1 (indexing table function is valid)

#1030.6 No 0 or 1 can be set as required to lock the front/rear motor disconnecting enable.

#1931 The minimum angle of each movement of the indexing table is set

#1932=4 (currently only Axis 4 is supported as indexing table)

K5.7 = 1 (indexing table function is valid)

K4.0 or K5.0 selects whether there is a releasing/clamping mechanism. (K5.0=0 defaults to yes)

K5.1 selects whether Axis 4 has a releasing in-place detection signal (default K5.1=0, no in-place detection)

K5.2 selects whether Axis 4 has a clamping in-place detection signal (default K5.2=0, no in-place detection)

When it is set to the in-place detection signal, the clamping/releasing in-place signal is not detected, and Axis 4 is locked.

3. Releasing/clamping of indexing table and motor enable connection/disconnection

Releasing/clamping of the indexing table is automatically completed. When there is a motion command, the system automatically outputs a releasing signal; when there is no motion command, the system automatically outputs a clamping signal, and disconnects the motor enable signal according to the sequence set by parameter #1030.6, so that the motor is in a free state.

3.21.2 CNC turntable

1. Characteristics of CNC turntable

When Axis 4 of the system is selected as the CNC turntable mode, Axis 4 can be rotated freely in the manual and handwheel mode, and Axis 4 can be commanded to rotate at any angle in the automatic mode. Whether the turntable releasing/clamping adopts automatic releasing/clamping or M code releasing/clamping can be set by K parameter. Please refer to the control and commissioning of CNC turntable for the specific meaning.

2. Parameters to be set for CNC turntable

#1030.7=0 (indexing table function is invalid)

K5.7=0 (indexing table function is invalid)

3. Control and commissioning of CNC turntable

In order to meet the control requirements of CNC turntable from different manufacturers, the following K parameters shall be reasonably set according to the different requirements of the releasing and clamping mechanisms related to the turntable control.

(1) With releasing/clamping devices

Set K5.0=0 when Axis 4 turntable has releasing and clamping devices.

Set K5.5=0 when Axis 5 turntable has releasing and clamping devices

(2) Without releasing/clamping devices

Set K5.0=1 when Axis 4 turntable has no releasing and clamping devices.

Set K5.5=1 when Axis 5 turntable has no releasing and clamping devices.

(3) With/without releasing in-place detection

Set K5.1=1 when Axis 4 turntable has releasing in-place detection, and K5.1=0 when it has no detection

Set K5.3=1 when Axis 5 turntable has releasing in-place detection, and set K5.3=0 when it has no detection

(4) With/without clamping in-place detection

Set K5.2=1 when Axis 4 turntable has clamping in-place detection, and K5.2=0 when it has no detection

Set K5.4=1 when Axis 5 turntable has clamping in-place detection, and K5.4=0 when it has no detection

(5) Selection of releasing/clamping by using M code or axis movement command

1) Axis 4 movement command or M11 command releasing

When K6.0=0 is set, and there is Axis 4 movement command in the program, PLC can automatically output the turntable releasing signal by using Axis 4 movement signal.

When K6.0=1 is set, and there is Axis 4 movement command in the program, PLC will not output CNC turntable releasing signal but can use M11 to release Axis 4 CNC turntable.

2) Axis 4 automatic clamping or M10 command clamping

When K4.6=1 is set, the automatic clamping function of Axis 4 is valid, and when there is no movement command of Axis 4, PLC automatically outputs the turntable clamping signal.

In practical application, the user may need to frequently start and stop Axis 4 when machining products. In order to avoid frequent action of Axis 4 turntable releasing/clamping mechanism, the user can also set K4.6=0 (Axis 4 automatic clamping function is invalid), when the turntable clamping is needed, M10 is used to clamp Axis 4 CNC turntable.

3) Axis 5 movement command or M21 command releasing

When K6.1=0 is set, and there is Axis 5 movement command in the program, PLC can automatically output the turntable releasing signal by using Axis 5 movement signal.

When K4.5=0 and K6.1=1 are set, and there is Axis 5 movement command in the program, PLC will not output CNC turntable releasing signal but can use M21 to release Axis 5 CNC turntable.

4) Axis 5 automatic clamping or M20 command clamping

When K4.7=1 is set, the automatic clamping function of Axis 5 is valid, and when there is no movement command of Axis 5, PLC automatically outputs the turntable clamping signal.

In practical application, the user may need to frequently start and stop Axis 5 when machining products. In order to avoid frequent action of Axis 5 turntable releasing/clamping mechanism, the user can also set K4.7=0 (Axis 5 automatic clamping function is invalid), when the turntable clamping is needed, M20 is used to clamp Axis 5 CNC turntable.

(6) Whether CNC turntable clamping disconnects the motor enable selection

K6.5=0, Axis 4 clamps and disconnects enable.

K6.5=1, Axis 4 clamps and disconnects enable

K6.6=0, Axis 5 clamps and disconnects enable.

K6.6=1, Axis 5 clamps and disconnects enable

3.22 Continuous operation of air pressure alarm

For machine equipped with tool magazine, when air pressure alarm occurs during machining, the system will automatically lock Axis Z. When the air pressure returns to normal,

the Cycle Start key is pressed to continue operation or the Reset button is pressed to relieve the air pressure alarm.

3.23 Parameter setting

3.2.1 K Parameter setting

Address	Function	Set value: 0	Set value: 1	Remarks
K0.1	Whether the spindle speed arrival signal is checked during cutting	Detection	Non detection	For turntable tool magazine
K0.2	Panel selection	Axis 5 panel	Axis 8 panel	
K0.4	Big tool function	Off	On	Manipulator tool magazine
K0.5	Selection of Vertical and Horizontal CNC	Vertical CNC	Horizontal CNC	Manipulator tool magazine
K0.6	Tool magazine function	Off	On	
K0.7	Automatic chip removal function	Off	On	
K1.1	Lubrication pressure detection function	Off	On	

Address	Function	Set value: 0	Set value: 1	Remarks
K1.2	Protective door alarm function	Off	On	
K1.4	Automatic power-off function	Off	On	
K1.6	Lubrication pump function	Invalid	Valid	
K1.7	Door opening limits spindle and feed axis speed	No	Yes	
K2.0	External MPG function	Off	On	
K2.1	Cutting feed rate 0% fast-moving	Non stop	Stop	
K2.2	Simultaneous control of fast and feed rate	Off	On	
K2.4	Chip flushing function	Off	On	
K2.5	Tool magazine forward and backward valve selection	Use of double valves	Use of single valve	For turntable tool magazine
K2.6	Workpiece blowing control/work light function	Off	On	
K2.7	Spindle control analog voltage selection	±10V	0~10V	
K3.0	Tool magazine homing function	Yes	No	For tool magazine manipulator
K3.1	Manipulator inching mode selection	Continuous action	Single-step inching	For tool magazine manipulator
K3.2	Function of reversing tool in advance	Off	On	For tool magazine manipulator
K3.3	Tool magazine counting signal selection	Take in-place signal	Take counting signal	For tool magazine manipulator
K3.4	Z-reverse direction position restriction function when changing the tool	Off	On	For turntable tool magazine
K3.5	High-speed machine Axis Z clamping function	Off	On	For turntable tool magazine
K3.6	Tool magazine commissioning state	Exit	Enter	
K4.0	Whether the machine has Axis 4	No	Yes	
K4.1	Whether the machine has Axis 5	No	Yes	
K4.6	Axis 4 automatic clamping function	Off	On	Release when opening is selected and there is a movement command, and clamp automatically after the movement is completed
K4.7	Axis 5 automatic clamping function	Off	On	
K5.0	Axis 4 has releasing/clamping device	Yes	No	
K5.1	Detect Axis 4 releasing in-place signal	No	Yes	

Address	Function	Set value: 0	Set value: 1	Remarks
K5.2	Detect Axis 4 clamping in-place signal	No	Yes	
K5.3	Detect Axis 5 releasing in-place signal	No	Yes	
K5.4	Detect Axis 5 clamping in-place signal	No	Yes	
K5.5	Axis 5 has releasing/clamping device	Yes	No	
K5.7	Axis 4 is selected for CNC turntable/indexing table	CNC turntable	Indexing table	
K6.0	Axis 4 turntable releases automatically	Yes	No	
K6.1	Axis 5 turntable releases automatically	Yes	No	
K6.5	Axis 4 (turntable) clamps and disconnects motor enable	Yes	No	
K6.6	Axis 5 clamps and disconnects motor enable	Yes	No	
K7.1	Whether the zero-speed signal of the spindle is detected when releasing the tool	Detection	Non detection	
K7.2	Spindle two-gear M gear shift function	No	Yes	
K7.3	Whether the spindle releasing and clamping tool signal is detected	Detection	Non detection	
K7.4	Analog spindle S code manual gear shift	Invalid	Valid	
K7.5	Whether the spindle is closed when the protective door gives an alarm	No	Yes	
K7.7	Panel tool releasing button	Invalid	Valid	
K8.0	Whether the manual releasing/clamping tool button operation is self-locking	Not self-locking	Self-locking	
K8.2	Asynchronous spindle motor S code gear shift	Invalid	Valid	
K8.7	Selection of single and double spindles	Single spindle	Double spindles	
K9.0	Detection of hard over-travel of all axes	Detection	Non detection	
K9.4	Axis 4 over-travel alarm detection	Detection	Non detection	
K9.5	Axis 5 over-travel alarm detection	Detection	Non detection	
K10.7	USER2 tooling control	Off	On	
K11.0	Lubrication alarm input signal	Connected to normal opening	Connected to normal closure	
K11.1	Protective door alarm input signal	Connected to normal opening	Connected to normal closure	
K11.2	Hydraulic alarm input signal	Connected to normal opening	Connected to normal closure	

Address	Function	Set value: 0	Set value: 1	Remarks
K11.3	Air pressure alarm input signal	Connected to normal opening	Connected to normal closure	
K11.4	Cooling pump alarm input signal	Connected to normal opening	Connected to normal closure	
K11.5	Chip remover alarm input signal	Connected to normal opening	Connected to normal closure	
K11.6	Alarm input signal of tool carrier for tool magazine	Connected to normal opening	Connected to normal closure	
K11.7	Manipulator alarm input signal	Connected to normal opening	Connected to normal closure	
K12.3	Turret tool magazine	Off	On	
K12.4	Servo motor tool carrier	Off	On	
K12.5	Disk manipulator tool magazine	Off	On	
K12.6	Turntable tool magazine function	Off	On	
K13.0	Red light buzzer output	Off	On	
K13.1	Yellow light buzzer output	Off	On	
K13.3	Spindle cooling overload alarm signal	Connected to normal opening	Connected to normal closure	
K13.7	Spindle oil cooler alarm signal	Connected to normal opening	Connected to normal closure	
K15.1	External robot control	Off	On	
K15.2	Calling program from outside the robot	Off	On	Valid when K15.1 = 1
K16.6	3 auxiliary alarm on	Off	On	
K16.7	M50 ~ M53 and output	Off	On	

3.2.2 C parameter setting

Counter number	Current value	Pre-set value	Function
1	Lubrication pump oil supply time (seconds)	Lubrication pump stop interval time (minutes)	
2	Tool-case number for tool changing position in the tool magazine	Total number of tools in the tool magazine	

Note: PLC before MV1.34 uses T parameter to set lubrication time, T6+T7 is total stop interval time of automatic lubrication pump, and T8 is oil pump time in millisecond

3.2.3 T parameter setting

Timer Number	Meaning description when setting	Reference value
3	Chip remover stop time	1200000ms
4	Chip remover working time	300000ms

3.24 M Code List

M code	Function	M code	Function
M00	Program stop	M30	Program ends and returns
M01	Optional stop	M34	Chip remover reverse
M02	End of program	M35	Chip remover forward
M03	Spindle turning counter-clockwise	M36	Chip remover stop
M04	Spindle turning clockwise	M37	Probe blowing on
M05	Spindle stop	M38	Probe blowing off
M06	Tool change	M39	Cancel rigid tapping state
M07	Workpiece blowing and cooling	M54	Spindle tool releasing
M08	Cooling pump on	M55	Spindle tool clamping
M09	Cooling and blowing off	M60	Tool selection for tool magazine (turntable tool magazine)
M10	Axis 4 clamping	M61	Tool changing condition check
M11	Axis 4 releasing	M65	Tool magazine forward/tool-case vertical
M19	Spindle orientation	M66	Tool magazine backward/tool-case horizontal
M18	Spindle positioning (homing point)	M81	Spindle 1 selection command
M20	Axis 5 clamping	M82	Spindle 2 selection command
M21	Axis 5 releasing	M98	Subprogram call
M23	Spindle positioning cancellation	M99	Subprogram return or cycle
M26	Spindle CS switches to position		
M27	Spindle CS switches to speed		
M29	Rigid tapping		

3.25 Commissioning of turntable tool magazine

3.25.1 Description of the action of tool changing in the turntable tool magazine

After executing M6 Txx command, the program judges whether the command T tool number meets the specification requirements. If it does, it enters the tool changing macroprogram.

(1) When Axis Z returns to the second reference point and tool return position, the spindle is orientated.

(2) The tool magazine advances to clamp the tool on the current spindle.

(3) Cylinder conflicts with the tool and releases the tool on the spindle.

(4) Axis Z returns to the first reference point (returning the spindle tool to the tool magazine).

(5) Turn the tool carrier to the new tool number position of T command.

(6) Axis Z returns to the second reference point to load the new tool into the spindle.

(7) Clamping tool.

(8) Tool magazine backward, and tool changing completed.

3.25.2 Basic parameters to be set before commissioning the tool magazine

(1) K 0#6=1 (tool magazine function is valid), K0#6=0 (tool magazine function is invalid);

(2) K3#6=1 (enter the tool magazine commissioning mode), K3#6=0 (exit the tool magazine commissioning mode);

Notes:

After entering the tool magazine commissioning mode, panel keys can be used to operate the tool magazine action, or the feed axis can be moved at a low speed in the non-backward position of the tool magazine. Please operate with caution as some interlocking is released by the commissioning state.

(3) Counter C2 [Pre-set Value] sets the total number of tools in the tool magazine

(4) Counter C2 [Current Value] sets the tool carrier position number for the current tool changing position of the tool magazine.

(5) K2#5=1 (forward and backward movement of the tool magazine is controlled by only one forward valve)

K2#5=0 (forward and backward of the tool magazine are controlled by two valves respectively)

(6) K3#0=0 (count sensor is non-sensing state diagnosis X14.2=0 when the tool carrier is stopped in the correct position)

K3#0=1 (count sensor is sensing state diagnosis X14.2=1 when the tool carrier is stopped in the correct position)

3.25.3 Setting of Axis Z second reference point (tool taking point)

The position of the tool taking point of the tool magazine is set at the second reference point of Axis Z. When the tool changing position is adjusted well, the current mechanical coordinate value is input into the axis corresponding to NC parameter #1051.

3.25.4 Setting of spindle orientation position

The spindle is swung to the position corresponding to the tool position of the spindle and the position of the tool carrier chuck after being turned several circles, with driver or system parameters set

(1) When matching the GR3000Y spindle driver, the value of 25iM system diagnosis 404 or spindle drive DP-APO is checked and input into the system NC parameter #5403, and the parameter position shall be the spindle orientation position.

(2) When matching the DAP03 spindle driver, the value in the driver DP-APO shall be checked, written in the driver PA-58 parameter and then saved.

(3) When matching the GS3000 spindle driver, the value in the driver DP-APO shall be checked, written in the driver PA-103 parameter and then saved.

Note: When using the bus-type GR3000Y series spindle drive, the directional position is set on the NC parameter.

3.25.5 Operation and signal check in commissioning state

The tool magazine forward button is pressed to push the tool magazine toward the spindle; inputting mode command M65 can also push the tool magazine toward the spindle. Observe whether the tool magazine moves

forward, and whether the corresponding output point has output information to judge and check whether the CNC system

has a tool magazine forward and backward control signal output, so as to further confirm whether the connecting wire between the tool magazine forward relay and the solenoid valve of the machine is correct or not and whether it is faulty.

3.25.6 Parameter setting called by tool changing macroprogram

(1) The tool changer macro program is stored in system O9001, and # 1610.4 sets whether to display and lock the permission to prohibit modification of the tool changer macro program. When # 1610=0, the system displays the O9001 tool changing macro program, which can be modified.

(2) The system parameter M code calls the tool changing macroprogram O9001 with parameter #6071=06

3.25.7 Tool changing trial

After the reference points of each axis and the positioning position of the spindle are adjusted well, the commissioning state of the tool magazine shall be cancelled. In the input mode, M6 T xx can be operated in a single-stage mode (where M6 is the tool changing macroprogram of the calling system, and the value after T xx is the tool number to be changed). Observe whether the tool changing action is correct.

3.25.8 Axis Z speed limiting function in tool changing of high-speed machine

Function and purpose

When Axis Z speed of the machine reaches more than 10 m/min, and Axis Z moves from the first reference point to the second reference point at high speed after the tool carrier is pushed below the spindle, the impact of the spindle tool buckle device on the tool carrier needs to be considered in the tool changing process of the turntable tool magazine, and the motion speed of Axis Z needs to be limited, so as to reduce the impact force of the spindle tool buckle device (integrated with Axis Z) on the tool carrier. Specifically, when Axis Z moves from the first reference point to the second reference point (tool grasping/taking position) at high speed by setting Axis Z position switch parameter, and it approaches the position above the tool handle, the Axis Z deceleration signal is triggered, so that Axis Z moves at a low speed according to the parameter set value, thereby achieving the functions of reducing impact and protecting the machine and the tool magazine.

Note: The second position switch set by #2533/#2565 parameter constitutes a block. When changing the tool, and Axis Z moves within the block set by the position switch parameter (position switch signal F70.1=1), Axis Z movement speed is not limited. When the machine Axis Z moves away from the set block, the position switch signal F70.1=0, PLC triggers an external deceleration signal, and Axis Z movement speed is limited to the movement speed set by #1250/#1251. Because there is a little hysteresis in the change of PLC switch signal F70.1, it is necessary to adjust the trigger point of the position switch to a proper position according to the maximum movement speed of machine Axis Z, so as to ensure the timely triggering of the deceleration movement of Axis Z and protect the machine and the tool magazine.

Schematic Diagram of Anti-impact Function of Tool Changing in Turntable Tool Magazine

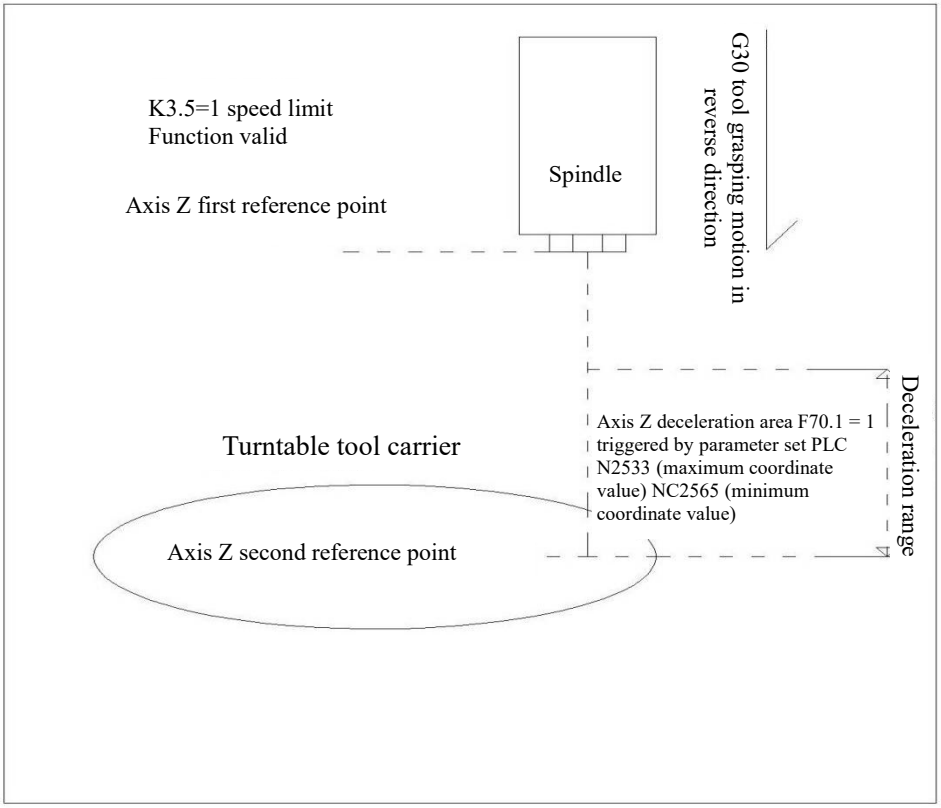

Parameter setting

(1) #1000.4=1 External deceleration function is valid

(2) #2401.3=1 Position switch function is valid

(3) #2501=3 Set the servo axis number corresponding to PLC position switch 2 (PSW02/F70.1) to Axis Z.

(4) External deceleration speed is triggered during #1250 ≈ 100~1000 mm/min cutting feed (the data given above are only reference values, and the actual movement speed of the machine can be adjusted elastically).

(5). External deceleration speed is triggered in #1251≈100~1000 mm/min fast movement (the data given above are only reference values, and the actual motion speed of the machine can be adjusted elastically).

(6) #2533=machine coordinate in forward maximum range corresponding to position switch 2 (PSW02/F70.1) (normally set to machine coordinate at or near the first reference point on the machine Axis Z)

(7) #2565=machine coordinate in reverse maximum range corresponding to position switch 2 (PSW02/F70.1) (normally set to machine coordinate at 30 mm to 100 mm above the second reference point of the machine Axis Z)

(8) #1050=0 (machine coordinate of Axis Z first reference point)

(9) #1051= machine coordinate at tool taking point of Axis Z (i.e., machine coordinate of Axis Z second reference point)

(10) #1002.5=0 (reverse external deceleration signal is valid in fast movement)

(11) #1002.6=0 (forward external deceleration signal is valid in fast movement)

(12) K3.5=1 Axis Z speed limiting function is valid in tool changing.

Example

The machine coordinate of the first reference point of the machine is 0, while that of the second reference point (tool taking/returning point) is -355.000. Triggering parameter #2533 in the forward direction range of position

switch can be set to 0 (or 1), while triggering point parameter # 2565 in the reverse direction can be set to -300.000, so that when the tool is changed, and Axis Z moves downward from the first reference point to the machine coordinate -300.000, Axis Z deceleration signal is triggered to enable the machine to start the deceleration movement and to stop when it reaches the second reference point (tool taking position).

Note: In radius compensation, tool changing will automatically cancel the compensation. Please re-assign the D code of the relevant tool after tool changing.

Tool changing macroprogram of turntable tool magazine

```
O9001                          (Tool changing macroprogram)
N010IF[#1000EQ1] GOTO190       (Command tool on spindle, machine lock and auxiliary lock turns to end)
N012M61                        (Tool changing condition check)
N020G15G40G49G80G69G50         (Modal cancellation)
N030G50.1X0Y0Z0                (Modal cancellation)
N040#1=#4003                   (Store G90/G91 modal)
N080G30G91Z0M19                (Axis Z back to the second reference point and directed)
N090M65                        (Tool magazine forward)
N100M54                        (Spindle tool releasing)
N110G4X0.3                     (Delay 0.3 S)
N120G28G91Z0                   (Axis Z lifted back to the first reference point)
N130M60                        (Select new tool)
N140G04X0.2                    (Delay 0.2 S)
N150G30G91Z0                   (Axis Z back to the second reference point)
N160M55                        (Spindle tool clamping)
N170M66                        (Tool magazine backward)
N180G#1M05                     (Reduction mode releases directionality)
N190M99                        (End of tool changing)
%
```

Note: In radius compensation, tool changing will automatically cancel the compensation. Please re-assign the D code of the relevant tool after tool changing.

3.26 Manipulator tool magazine commissioning

3.26.1 Description of tool changing action of manipulator

(1) In the automatic and input mode, after executing the Txx M6 command, the program first judges whether the input tool number command meets the specification requirements. If it does, the tool selection will be carried out.

(2) Select the tool-case in the tool carrier to fall.

(3) Axis Z returns to the second reference point, with the spindle orientated.

(4) Manipulator grasps the tool.

(5) Spindle conflicts with the tool cylinder and releases the tool.

(6) Manipulator rotates 180 degrees to exchange the tool.

(7) Spindle conflicts with the tool cylinder and clamps the tool.

(8) Manipulator returns to origin.

(9) Tool-case is lifted.

(10) Directionality is cancelled, and tool changing is completed.

The entire tool changing process is completed automatically by CNC, and the user only needs to input command M6 for operation

3.26.2 Basic parameters to be set before commissioning the tool magazine

(1) K12#5=1 The disk manipulator tool magazine function is valid (0: Off/1: On).

(2) K3#6=1 (enter the tool magazine commissioning mode), K3#6=0 (exit the tool magazine commissioning mode).

(3) Counter C2 [Pre-set Value] sets the total number of tools in the tool magazine.

(4) Counter C2 [Current Value] sets the tool-case number for the current tool reversing position of the tool magazine.

(5) K3#3 Selects whether the same sensor input is used for tool counting and tool in-place detection. Yes: When K3#3 is set to 1, tool counting signal is wired to X14.2. No: When K3#3 is set to 0, counting signal is wired to X14.2, and the in-place signal is wired to X14.0.

(6) K3.4 selects the tool-case rotated in place, whether the tool counting signal is in the sensing state. In the sensing state, if X14.2=1 is diagnosed when it is in place, K3#4 is set to 1.

3.26.3 Setting of Axis Z second reference point (tool buckling point)

The position of the tool buckling point of the manipulator is set at Axis Z second reference point. After the tool buckling position is adjusted well, the current mechanical coordinate value is input into the axis corresponding to the NC system parameter #1051.

3.26.4 Setting of spindle orientation position

The spindle is swung to the position corresponding to the tool position of the spindle and the position of the tool carrier chuck after being turned several circles, with driver set:

GR3000 checks the value of system diagnosis 404 or spindle driver DP-APO, and enters NC parameter 5403.

DAP03 spindle driver checks the value in DP-APO, then writes the value into PA-58 and saves the parameter.

GS300 spindle driver checks the value in DP-APO, then writes the value into PA-103 and saves the parameter

Note: When using the bus-type GD3000Y series spindle drive, the directional position is set on the NC parameter.

3.26.5 Setting of tool magazine data sheet

(1) Description of data table meaning

Tool-case number	Data address	Data	Meaning description
	D0000	3	Spindle contains Tool 3
1	D0001	1	Tool-case 1 contains Tool 1
2	D0002	2	Tool-case 2 contains Tool 2
3	D0003	5	Tool-case 3 contains Tool 5
4	D0004	8	Tool-case 4 contains Tool 8
5	D0005	10	Tool-case 5 contains Tool 10
……	……		……

(2) Automatically arrange tool data sheet:

Tool carrier goes home. In the homing mode, when the tool magazine homing button is pressed, the tool magazine turns the tool position 1 to the tool changing position to complete homing. If the tool magazine has no homing switch, the tool position 1 of the tool magazine shall be manually turned to the tool changing position, and then the PLC parameter K3.0 is set to 1.

In MDI mode, M76 command is operated.

Check [PLC] - [PLC Parameter] -[Data] - [Data Display], where the address D0000 position of the data sheet is the tool 0 on the spindle, the tool number installed in the rest of the tool-cases is consistent with the tool-case number, and the initialization of the data sheet is completed.

3.26.6 Operation and signal check in commissioning state

In manual mode, the tool magazine forward button is pressed, and the tool-case will fall. When the tool magazine backward is pressed, the tool-case is lifted; when the tool magazine counter-clockwise is pressed, the tool carrier will turn forward one position and stop when the tool position is reached; when the tool magazine clockwise is pressed, the tool carrier will turn reversely one position and stop when the tool position is reached.

In the commissioning state, the tool changer is pressed. When K3.1=0, the manipulator moves in inching mode, and the action stops when the key is released. The manipulator can stop at any position by controlling the time length of pressing the key. When K3.1=1, the panel tool changer button is pressed; the manipulator acts step by step, with a step action performed at each press.

In the homing mode, when the tool magazine homing is pressed, the tool carrier starts to rotate forward. When the tool carrier has homing switch, it will stop at the homing switch. If the homing switch is not connected, the tool carrier will keep rotating until the tool changing timeout alarm of the machine is given.

In the commissioning state, the relevant protection conditions of the machine will be shielded. Attention shall be paid to the mechanical position and safety when operating it manually

3.26.7 Setting of tool changing macroprogram and commissioning exit

Set NC system parameter #6072=6; used for M code calling the tool changing subprogram O9002, the system parameter #1610.4 sets whether the macro program cannot be changed and displayed by locking it.

After adjusting the reference point of each axis and the positioning position of the spindle, and step-by-step action detection is completed, the commissioning state can be quit, with K3.6=0 set. In automatic mode, tool changing M6 Txx can be commanded.

3.26.8 Example of tool pre-selection

M6 T4	(Call Tool 4 for machining)
T2	(Pre-select Tool 2 in advance)
G54 G90 G00 X0 Y0 Z50	(Use Tool 4 for machining)
G01 X100 F200	(Procedure for machining Tool 4)
G01 Y200	(Procedure for machining Tool 4)
G02 X200 Y300 R100 F100	(Procedure for machining Tool 4)
M6	(Tool exchange. Tool 4 returns to the magazine, and Tool 2 is called for machining)
T12	(Pre-select Tool 12 in advance)
G54 G90 G00 X10 Y10 Z150	(Use Tool 2 for machining)
G01 X200 Y100 F200	(Procedure for machining Tool 2)
G01 Y200 X50	(Procedure for machining Tool 2)
G02 X200 Y300 R100 F100	(Procedure for machining Tool 2)
M6	(Tool exchange. Tool 2 returns to the magazine, and Tool 12 is called for machining)
T6	(Pre-select Tool 6 in advance)

……

……

3.26.9 Tool changing macroprogram of manipulator

```
%
O9002                          (Tool changing macroprogram)
N010 IF[#1001EQ1] GOTO100      (Command tool number on spindle)
N020 G15G40G49G80G69G50        (Modal cancellation)
N030 G50.1X0Y0Z0               (Modal cancellation)
N040M65                        (Tool magazine falls)
N050#1=#4003                   (Store G90/G91 modal)
N060G30G91Z0M19                (Axis Z back to the second reference point and directed)
N070M16                        (Manipulator starts exchanging)
N080M66G#1                     (Tool magazine is lifted and restores the modal)
N090M05                        (Release directionality)
N100 M99                       (End of tool changing)
%
```

Note: In radius compensation, tool changing will automatically cancel the compensation. Please re-assign the D code of the relevant tool after tool changing.

3.26.10 Big tool management function of manipulator

1.Description of big tool function

Some users need to use a larger tool to process the workpiece in part machining. Because of the size of the tool, its insertion into the tool carrier may interfere with or squeeze against adjacent tool. In order to avoid the collision between the big tool and the adjacent tool in the tool carrier, we have developed a special big tool management PLC program for managing, scheduling and using big tools in the tool carrier. This rule of managing, scheduling and using big tools in the tool carrier is called big tool management function.

2.Turns on K parameter of the big tool management function

The PLC of big tool management function is completed based on modification and expansion of MV1.55B. After the tool magazine function of manipulator is turned on, K0#4=1 is set, and big tool management function is turned on.

3.Rules that must be followed before big tool management function is turned on

1) Before turning on big tool management function (K0.4=1), the tool magazine data sheet must be initialized in advance so that the tool-case number in the data sheet is consistent with the tool number. Namely: data sheet D000=0, D001=1, D002=2, D003=3... D00n=n.

2) 3 big tool numbers to be used are respectively set in the data sheets D101, D102 and D103, and the set big tool numbers are not allowed to be the adjacent tool numbers on the tool carrier. For example, when D101 = 3 (Tool 3 is set as big tool), D102≠2, D102≠4, D103≠2 and D103≠4; it is also not allowed to set to the same big tool number, for example: D101=D102=D103=2, otherwise the system will give PLC alarm. If the above rules are violated and the setting is incorrect, and an alarm is given for the wrong big tool setting data, the tool magazine data sheet must be initialized or the tool magazine data sheet must be manually rearranged to make sure that the new big tool number is reset after the tool-case number in the data sheet is consistent with the tool number.

3) Once the big tool number is set in the data sheets D101 to D103, the big tool can only be inserted into the big

tool-case set in D101, D102, and D103 when changing the tool. The tool-case adjacent to the big tool is assigned with a tool number of tools that exceeds the total number and cannot be searched.

4) In the first setting, the current spindle tool number D000 in the data sheet defaults to small tool, i.e., D101 ~ D103≠0

4.Description of big tool changing action

When the small tool is on the spindle, the tool changing rule is the same as before, the tool can be pre-selected in advance by separate T** code, and the tool can be changed randomly at any time by Y using M6T**; if the big tool is on the spindle, the tool cannot be pre-selected in advance by using T** code alone, only new tools to be changed can be commanded in M6T** format. Otherwise, the system will give PLC alarm. When command M6T** calls the tools, the manipulator will first return the big tool on the spindle to the tool-case where the big tool is taken previously, then the tool carrier is turned to select the tools to be called, and the manipulator will carry out the second exchange operation.

5. Handling in data sheet errors

In case of tool number error caused by other reasons and initialization of data sheet required, big tool function (set K0.4=0) shall be turned off. After executing tool magazine homing (or manually turning tool-case 1 to reverse tool notch), M76 command is run in MDI mode to initialize the data sheet, and then big tool function is turn on again after initialization (K0.4=1) is completed.

6. Tool changing macroprogram of big tool function

When the big tool function is used, a new version of tool changing macroprogram with big tool judgment function must be used. The tool changing macroprogram can be compatible with the previous tool changing macroprogram without big tool function, and can automatically recognize the setting status of big tool function K parameter. When big tool function is turned off (K0.4=0), only M76 is required to reinitialize the tool magazine data sheet, without replacing the tool changing macroprogram.

The following is tool changing macroprogram with big tool management and judgment function:

```
O9002
N010IF[#1001EQ1]GOTO160
N020G15G40G49G80G69G50
N030G50.1X0Y0Z0
N040 M65
N050 #1=#4003
N060 G30G91Z0M19
N070 M16
N080 G#1
N090 IF[#1006EQ0]GOTO160
N100 IF[#1003EQ1]GOTO120
N110 GOTO160
N120 IF[#1004EQ1]GOTO80
N130 M65
N140 M16
N150 G#1
```

N160 M99

3.27 Turret (gripper arm) tool magazine (K12#3=1)

3.27.1 Description of tool changing action of tool magazine

(1) Axis Z is lifted and returns to the first reference point (to the outer edge of the tool magazine)

(2) Spindle orientation

(3) M61opens the first soft limit II (Axis Z travel extends to the tool changing area of the tool magazine)

(4) Axis Z is positioned to the second reference point (i.e. tool selection point for returning the old tool to the magazine)

(5) Rotary tool selection of tool magazine

(6) Axis Z descends to the first reference point (tool taking)

(7) M5cancels the spindle orientation and closes the first soft limit II (restores the normal travel of Axis Z)

(8) End of tool changing

3.27.2 Description of turret tool magazine commissioning

(1) Concept of tool changing area and tool changing permission point

Tool changing area: The tool changing area of turret magazine ranges from the first reference point to the second reference point of Axis Z.

Tool changing point: Near Axis Z second reference point (i.e. the position where the tool carrier can be rotated without interference).

(2) K parameter related to the hardware switch in the tool changing area sets K4#2 and K4#3

Axis Z tool changing point is set at the second reference point. When Axis Z reaches the second reference point, the tool changing area switch and the tool changing permission switch shall be pressed.

K parameter K4#2 shall be set to 1 when there is a tool changing area switch, and K4#3 shall be set to 1 when there is a tool changing permission hardware switch, with NC parameter in the following sheet set.

K parameter K4#2 shall be set to 0 when there is no tool changing area switch, and K4#3 shall be set to 0 when there is no tool changing permission hardware switch, with NC parameter in the following sheet set.

Parameter number	Annotation for parameter	Set value	Description
2401.3 SWI	Valid signs of position switch	1	Turn on position switch function
2505	Axis number corresponding to position switch 6	3	Set the range of tool changing area corresponding to PLC signal F70.5
2537	Maximum operating range of position switch 6	Axis Z second reference point value +1 mm	
2569	Minimum operating range of position switch 6	Axis Z first reference point +1 mm (shall be higher than the first reference point)	
2507	Axis number corresponding to position switch 8	3	Set the allowable range of tool changing corresponding to PLC signal F70.7
2539	Maximum operating range of position switch 8	Second reference point value +1 mm	

2571	Minimum operating range of position switch 8	Second reference point value -1 mm	

(3) Operational constraint on tool changing area

1) The spindle without directionality cannot enter the tool changing area. If the spindle orientation is cancelled after entering the tool changing area, Axis Z can only move reversely at low speed. The commissioning parameter K3.6=1 needs to be set for moving upward.

2) Rotating the spindle and starting the program command are not allowed if the spindle is in the tool changing area.

3) When the tool carrier is not rotated in place, axes are locked and cannot be moved.

(4) Tool number setting and soft limit setting

1) The current value of counter 2 must be consistent with the tool number of the current tool changing position, and the pre-set value shall be the total number of tools in the tool magazine.

2) The first soft limit position (parameter 1080, 1081) and the first soft limit position II (parameter 1086, 1087) are switched through PLC signal G7.6{15} by the command in the tool changing macroprogram, including the soft limits of each axis during machining operation and tool changing respectively.

Example of ZH5120C setting:

Parameters	Function	X axis	Y axis	Z axis
1080	Storage travel detection 1 forward boundary	500.5	0.5	0.5
1081	Storage travel detection 1 reverse boundary	-0.5	-400.5	-300.5
1086	Storage travel detection 1 forward boundary II	500.5	0.5	140
1087	Storage travel detection 1 reverse boundary II	-0.5	-400.5	-300.5

T parameter (timer)

Timer Number	Timer address	Setting value	Function	Remarks
40	T78	232	Tool magazine stop delay	Unit: ms

C parameter setting

Counter number	Counter address	Current value	Pre-set value	Function
1	C0	Working time of automatic lubrication pump	Automatic lubrication pump stop interval time	
2	C4	Spindle tool number	Total number of tools in the tool magazine	

3.27.3 Axis Z deceleration impact protection function in tool changing (K3.5=1)

When the moving speed of the machine is greater than 10 m, gripper arm tool magazine changes tools, and Axis Z moves upward through the tool releasing area from the first reference point or downward from the second reference point to grasp the tool, a relatively large impact force will be produced. In order to reduce the impact between the spindle and the tool, the moving speed of Axis Z can be slowed down in a certain range. See Figure 3-27-3-1.

Schematic Diagram of Impact Protection Function of Turret Tool Magazine Tool Changing

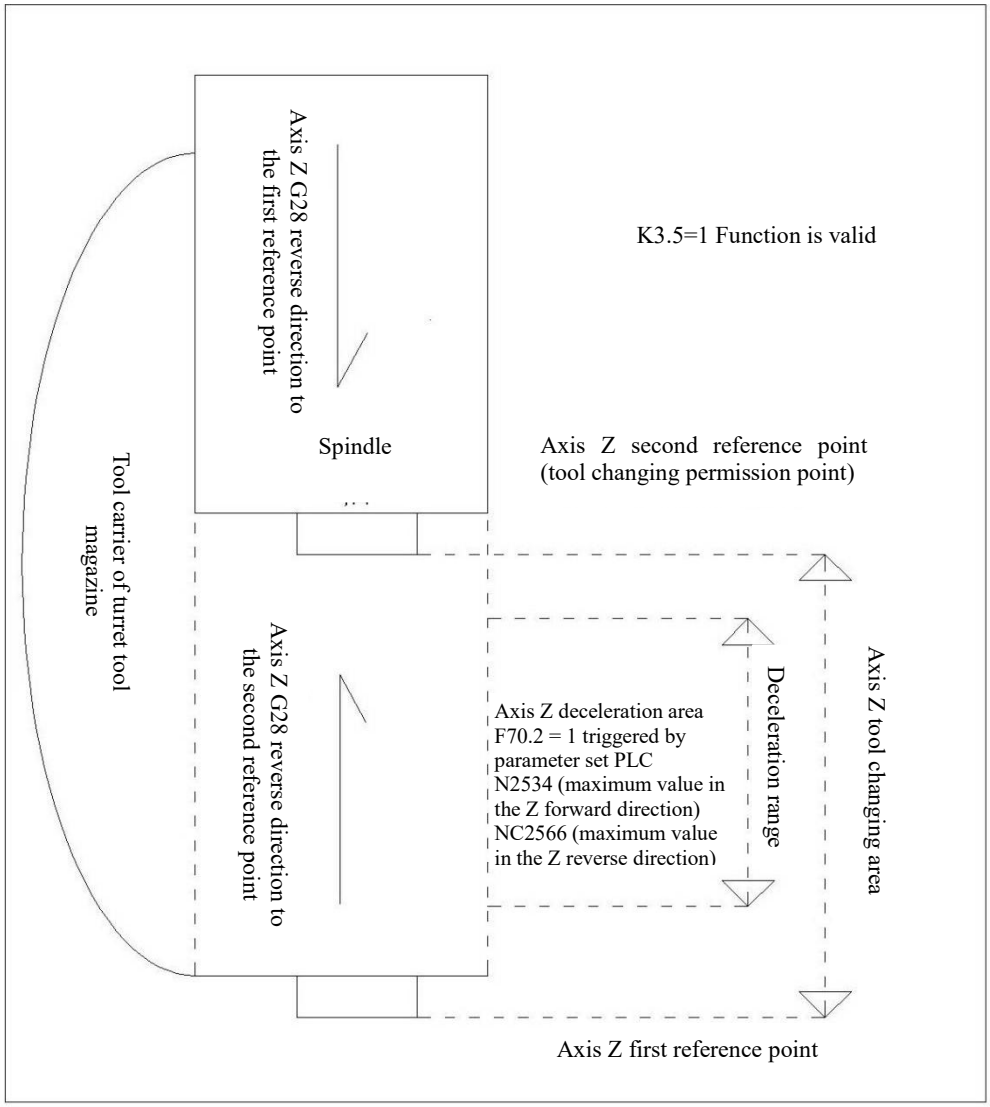

Fig. 3-27 -3-1

3.27.4 K3#5 and NC parameter to be set for Axis Z speed limiting impact protection function

(1) NC1000#4=1External deceleration function is valid

(2) NC2401#3=1 Position switch function is valid

(3) NC2502=3 Set the servo axis number corresponding to PLC position switch 3 (PSW02/F70.2) to Axis Z.

(4) External deceleration speed is triggered during NC1250 ≈1000~6000 mm/min cutting feed (the data given

above are only reference values, and the actual movement speed of the machine can be adjusted elastically).

(5) External deceleration speed triggered in NC1251≈1000~6000 mm/min fast movement (the data given above are only reference values, and the actual motion speed of the machine can be adjusted elastically).

(6) NC2534=machine coordinate in forward maximum range corresponding to position switch 3 (PSW02/F70.2) (normally set to machine coordinate at 2/3 of the distance from the first reference point to the second reference point of the machine Axis Z, or can be adjusted according to the actual machine).

(7) NC2566=machine coordinate in reverse maximum range corresponding to position switch 3 (PSW02/F70.2) (normally set to machine coordinate at 1/3 of the distance from the first reference point to the second reference point of the machine Axis Z, or can be adjusted according to the actual machine).

(8) N1050=0 (machine coordinate of Axis Z first reference point)

(9) NC1051= machine coordinate of Axis Z second reference point

(10) NC1002#5=1 (reverse external deceleration signal is valid in fast cutting feed)

(11) NC1002#4=1 (forward external deceleration signal is valid in fast cutting feed)

(12) K3.5=1 Axis Z speed limiting function is valid in tool changing.

3.27.5 Tool changing macroprogram of turret

O9001

N010IF[#1000EQ1]GOTO190

N020G15G40G49G80G69G50

N030G50.1X0Y0Z0

N040#1=#4003

N060G28G91Z0M19

M61

#3004=2

G30G91Z0P3

G30G91Z0

N090M60

G04 X0.2

G30G91Z0P4

G28G91Z0

G#M5

M99

3.28 Tool changing macroprogram with turntable, manipulator and turret tool magazine three-in-one

(MbV2.0 ABCS version PLC standard factory three-in-one tool changing macroprogram)

O9001

(20170504)

N010 IF[#1007EQ1]GOTO190

```
N012 IF[#1008EQ1]GOTO400
N020 IF[#1005NE1]GOTO610
N030 IF[#1001EQ1]GOTO600
N040 G15G40G49G80G69G50
N050 G50.1X0Y0Z0
N060 M65
N070 #1=#4003
N080 G30G91Z0M19
N090 M16
N100 G#1
N110 IF[#1006EQ0]GOTO600
N120 IF[#1003EQ1]GOTO140
N130 GOTO600
N140 IF[#1004EQ1]GOTO100
N150 M65
N160 M16
N170 G#1
N180 GOTO600
N190 IF[#1000EQ1]GOTO600
N200 M61
N210 G15G40G49G80G69G50
N220 G50.1X0Y0Z0
N230 #1=#4003
N240 G30G91Z0M19
N250 M65
N260 M54
N270 G4X0.2
N280 G28G91Z0
N290 M60
N300 G04X0.05
N310 G30G91Z0
N320 M55
N330 M66
N340 G#1M05
N360 GOTO600
```

N400 IF[#1000EQ1]GOTO600

N410 G15G40G49G80G69G50

N420 G50.1X0Y0Z0

N430 #1=#4003

N440 G05P3

N450 G28G91Z0M19

N460 M61

N470 #3004=2

N480 G91 G01 Z100.0 F5000

N490 G30G91Z0

N500 M60

N510 G91 G01 Z-100.0 F5000

N520 G28 G91 Z0

N530 #3004=0

N540 G#1M5

N600 M99

N610 #3000=199（MAGAZINE MODEL NOT SET UP）

%

3.29 Description of PLC alarm information

Address	Alarm signal	Alarm information	Remarks
A0.0	2000	Lubrication alarm. Relevant parameter addresses K11.0, X11.0	
A0.1	1001	The protective door not closed. Relevant parameter addresses K11.1, K1.2, X11.1	
A0.2	1002	Hydraulic motor overload. Relevant parameter addresses K11.2, X11.2	
A0.3	1003	Low air pressure alarm. Relevant parameter addresses K11.3, X11.3	
A0.4	1004	Cooling motor overloaded. Relevant parameter addresses K11.4, X11.4	
A0.5	1005	Chip removal motor overloaded. Relevant parameter addresses K11.5, X11.5	
A0.6	1006	Tool carrier motor overloaded. Relevant parameter addresses K11.6, X11.6	
A1.0	2010	Lubrication pressure switch state error	
A1.1	1011	Tool releasing/clamping signal abnormal. Relevant parameter addresses K7.3, X12.5, X12.6	
A1.2	1012	Tool releasing/clamping command timeout. Relevant addresses X12.5,	

Address	Alarm signal	Alarm information	Remarks
		X12.6	
A1.3	2013	It is forbidden to release the tool. Tool releasing is not allowed when the spindle is in operation	
A1.4	1014	The tool carrier does not rotate or the counting signal does not change after tool selection. Relevant address X14.2	
A1.5	1015	Tool selection command running timeout	
A1.6	1016	Tool carrier stop position error. Relevant address X14.2	
A1.7	1017	Tool magazine forward/backward command execution timeout	
A2.0	1020	Tool magazine forward/backward signal abnormal, relevant addresses X14.3, X14.4	
A2.1	2021	Spindle rotation is not allowed when the tool magazine is not in a safe position	
A2.2	2022	Spindle rotation is not allowed when it is not clamped. Relevant addresses X12.5, X12.6	
A2.3	1023	Command tool number is 0 or exceeds the total number of tools. Relevant address counter C4	
A2.4	1024	Spindle cooling system alarm. Relevant parameter addresses K12.3, X12.3	
A2.5	1025	Operation panel communication interrupted	
A2.6	2026	K3.6 commissioning state is turned on. Please operate it with caution and close it in time after completion	
A2.7	1027	When the tool magazine is in the non-backward position, the spindle is not released and allowed to stop, and the spindle cannot be moved	
A3.0	1030	Undefined M code commanded	
A3.1	2031	The spindle cannot be operated manually in rigid tapping state	
A3.2	2032	Insufficient lubrication pump pressure. Relevant address X12.4	
A3.3	1033	T code is not commanded when executing M06 tool changing command	
A3.4	1034	Axis 4 is not released. Relevant addresses X13.0, X13.1	
A3.5	1035	Axis 5 is not released. Relevant addresses X13.4, X13.5	
A3.6	1036	Spindle cooling system overloaded. Relevant parameter addresses K13.3, X13.3	
A3.7	1037	Turntable is not clamped	
A4.0	1040	Spindle orientation execution timeout, relevant address F45.7	
A4.1	1041	Spindle VP switch timeout, relevant address F76.3	
A4.2	1042	Tool changing cannot be started when the tool magazine is in the non-backward position	

Address	Alarm signal	Alarm information	Remarks
A4.3	2043	Error setting: The pre-set value of counter C0 shall be greater than the current value of C40	
A4.4	1044	Spindle gear shift execution timeout	
A4.5	1045	Spindle gear signal error. Relevant addresses X12.0, X12.1, X12.2	
A4.6	1046	Mutually exclusive M code is commanded at the same time	
A4.7	1047	Please check the data sheet if the tool number of T command is not found	
A5.0	1050	Axis Z is not at the reference point; thus, the tool selection cannot be commanded	
A5.1	1051	Axis Z is not at the second reference point; thus, the tool magazine forward cannot be commanded	
A5.2	1052	The spindle is not allowed to stop; thus, the tool magazine forward cannot be commanded	
A5.3	2053	When the protective door is open, the speed of spindle and feed axis is limited	
A5.4	2054	Axis Z movement is out of range when the tool magazine is not in the backward position	
A5.5	1055	The air supply pressure is too low or the pressure detection circuit is faulty	
A5.6	1056	The tool clamping signal X12.6 jitter or loss is detected during cutting	
A5.7	1057	Bank position signal X14.4 jitter or loss of the tool magazine is detected during cutting	
A6.0	1060	Startup of the program is prohibited when the tool magazine is in the non-backward position	
A6.1	2061	The spindle speed arrival signal F45.3 loss is detected during cutting, with relevant parameter K0.1	
A6.2	1062	Chip flushing motor overload alarm. Relevant addresses X13.2, K10.5	
A6.4	1064	Axis 5 is not clamped, with relevant parameter addresses K5.4, X13.5	
A6.5	1065	Axis 4 clamping signal is detected, with relevant K5.2, X13.1	
A7.0	1070	Manipulator switch timeout	
A7.1	1071	When the auxiliary function is locked, no tool changing is locked by the machine	
A7.2	1072	Axis 5 clamping signal is detected, with relevant K5.4, X13.5	
A7.3	1073	Axis 5 releasing signal is not detected, with relevant K5.3, X13.4	
A7.4	1074	Axis 4 with releasing and clamping K5.0 parameter is not set	
A7.5	1075	Axis 5 with releasing and clamping K5.5 parameter is not set	
A7.6	1076	Axis 4 indexing table is not in place or clamped, with relevant K6.4	
A7.7	1077	Releasing in-place X13.0 is not detected by the indexing table	
A8.0	1080	The M code of command exceeds the scope 255 defined by the PLC	

Address	Alarm signal	Alarm information	Remarks
A8.1	1081	The S code of command exceeds the limits of this PLC	
A8.2	2082	No spindle zero speed signal is detected or K7.1 is not set	
A8.3	1083	Spindle alarm	
A8.4	2084	Press [Tool Magazine Clockwise] key to rotate the tool	
A8.5	2085	Press [Tool Magazine Counter-clockwise] key to rotate the tool	
A9.0	1090	The S value of command is already greater than 800 rpm at low gear	
A9.1	1091	The S value of command is already less than 200 rpm at high gear	
A9.3	1093	Please complete the spindle gear shift before commanding the rigid tapping	
A9.6	2096	Servo tool coordinate position is being slightly adjusted K14.4	
A9.7	2097	The coordinate of the current tool-case machine is inconsistent with the setting of C6 tool number	
A10.0	1100	Tool magazine servo driver alarm	
A10.1	1101	The tool magazine is not in the forward in-place position; thus, the tool selection cannot be commanded	
A10.2	1102	When the tool magazine is in the non-backward position, the spindle is not released/allowed to stop, and the spindle cannot be moved	
A10.4	2104	Spindle rotation is not allowed when the tool magazine is not in a safe position	
A11.0	1110	Check motor load and circuit when the tool carrier motor is overloaded	
A11.1	1111	The tool carrier is not running or has rotated without counting signal after executing the tool selection command	
A11.3	1113	The stop position of tool magazine counting switch is wrong	
A11.4	1114	Starting tool changing in the tool changing area is prohibited	
A11.5	1115	The tool carrier position is wrong, and movement is prohibited	
A11.6	1116	Spindle rotation is not allowed when the tool magazine is not in a safe position	
A12.0	1120	The spindle is not directed into the tool changing area and cannot move Axis Z forward	

PLC alarm with Alarm signal in the range of 1000 ~ 1999 appears, and the system displays alarm state and stops automatic operation; The range from 2000 to 2999 presents prompt information, which does not affect the automatic operation state of the system.

Volume 3 Parameters

Chapter 1 Parameter display

The operation steps for displaying parameters are as follows:

(1) After the function key on the MDI panel is pressed 系统 SYSTEM several times, or the function key 系统 SYSTEM is pressed once, the [Parameter] softkey and the [Operation] softkey are pressed in turn to enter the parameter screen.

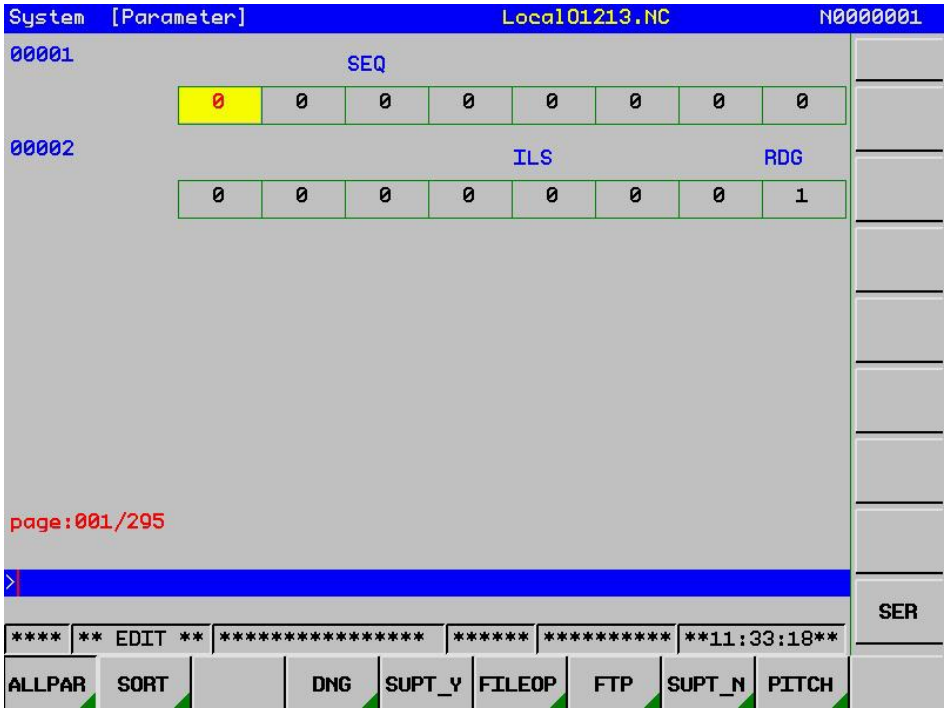

Back to Menu Key Softkey

Function button

(2) The parameter screen is composed of multiple pages. There are two ways to select the page where the parameters need to be displayed.

(a) Required parameter class is selected with soft keys, and then the page turning key or cursor moving key is used to find the required page

(b) After the parameter number to be displayed is input from the keyboard, the [Search] softkey is pressed to display the page where the assigned parameter is located with the cursor at the assigned parameter position (the data portion becomes the selected color).

Chapter 2 Set parameters in MDI mode

The steps for setting parameters are as follows:

(1) Press 偏置 OFT 设定 SET to enter the offset setting interface, and enter the corresponding password first.

In order to prevent malicious modification of machining program, CNC parameters, etc., the GSK25i system provides permission setting function, and the password has 8 levels from high to low, including Level 0 (system high level), Level 1 (system service level), Level 2 (machine manufacturer level), Level 3 (installation and commissioning level), Level 4 (terminal management level), Level 5 (operator level 1), Level 6 (operator level 2)and Level 7 (operator level 3) respectively (see Figure 2-1).

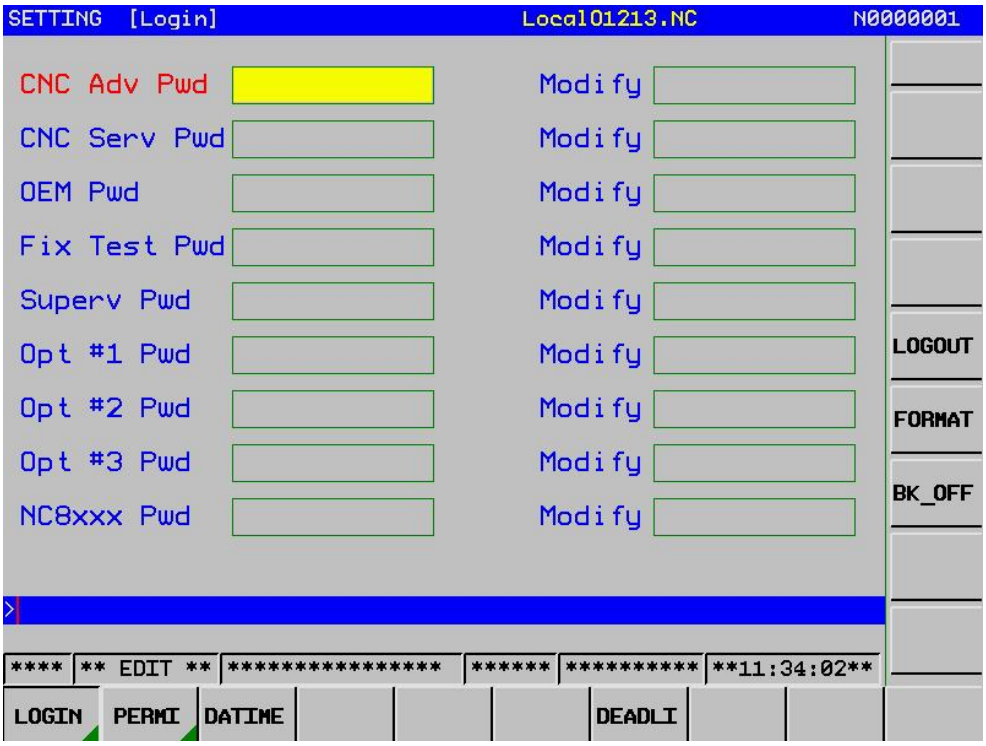

Fig. 2-1

0 Level: The highest authority is reserved by the developer. Clear alarm/operation message.

1 Level: Used for system manufacturer service, and various data of the system can be modified.

2 Level: Can modify PLC program, PLC annotation editing and pitch compensation; start/stop PLC operation; introduce and outgoing PLC and screw complement files; modify/introduce and issue User Customization Interface Authority.

3 Level: Can modify parameters and PLC resource data; introduce and issue NC parameter and PLC parameter files; can upgrade system, interpolation and position control maintenance software.

4 Level: Can modify the program, tool offset and set various function settings of the interface, workpiece coordinate system values, macro variable values; has authority to modify the programmer password.

5 Level, Level 6, Level 7: End-user administrators authorize the operation authority of the appropriate personnel by means of a bit parameter. The system defaults to Level 7, without entering passwords.

Note: To modify the login password of the interface, first enter the original password to log in to the corresponding user, and then enter the password to be modified at the corresponding place (entered twice). The passwords of lower-level users can also be modified through advanced users, but users at the same level cannot modify passwords to each other.

Defined by bit parameter authorized by end-user administrator

Bit	Meaning	Notes
0	G code modification authority	1 Authorized
1	Tool offset modification authority	1 Authorized
2	Wear modification authority	1 Authorized
3	Set modification authority	1 Authorized
4	Coordinate system modification authority	1 Authorized
5	Macro modification authority	1 Authorized
6	Authority to copy G code to USB flash disk	1 Authorized
7	Reserve	

(2) Enter the password at the corresponding level and press 输入 INPUT key. If it is correct, the system will not give any prompt; if it is incorrect, the system will prompt "Password Error". Pressing [Logout] can log out directly, and the password can be cancelled immediately.

(3) Modify the appropriate parameter and setting.

(4) The password is automatically cancelled after modification.

Chapter 3 Set or maintain system parameters through PC upper computer software

3.1 Editing of system parameters

This software can edit parameters in PC software, and upload and download parameter files related to backup through USB flash disk (see Figure 3-1, Figure 3-2).

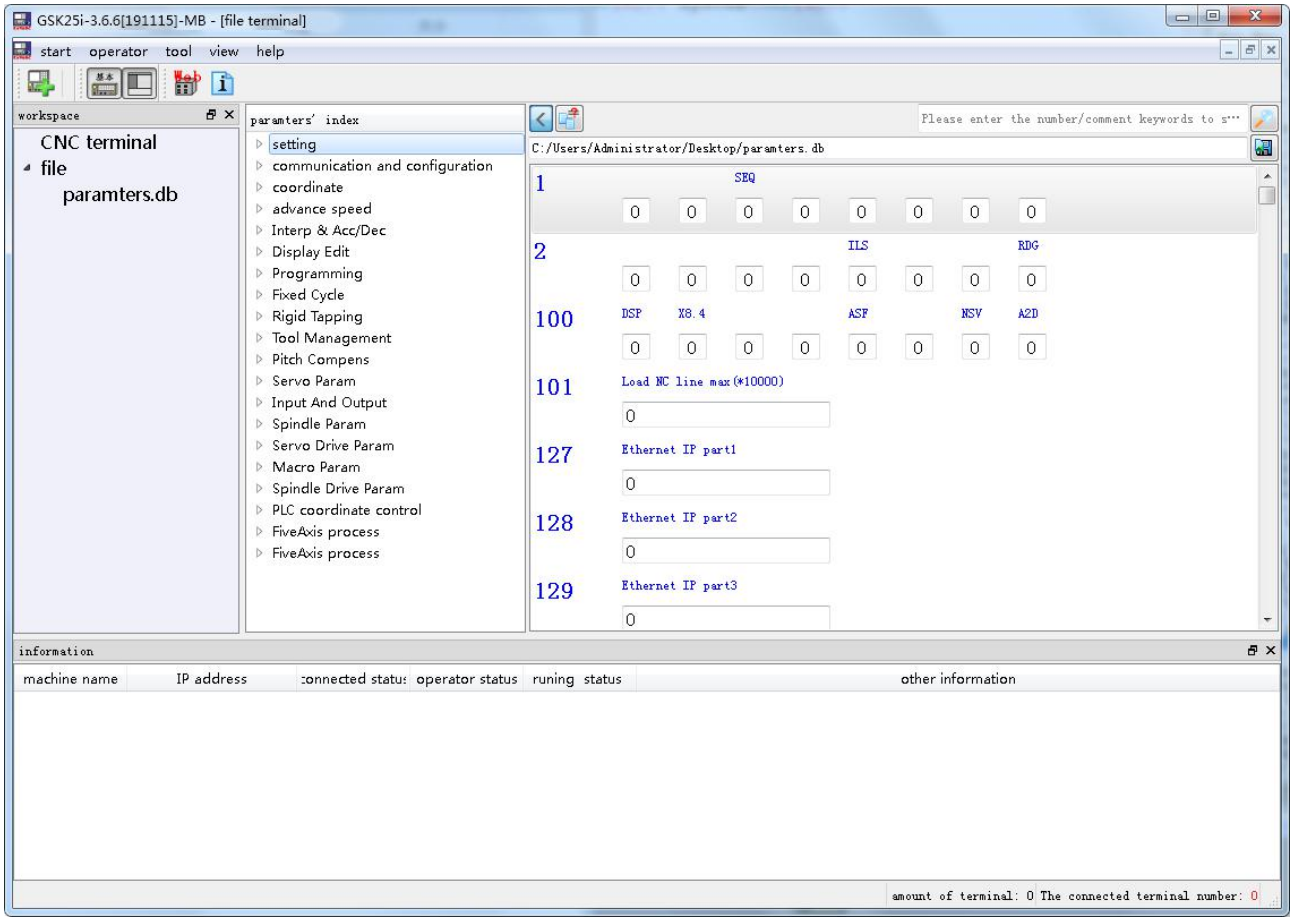

Fig. 3-1 System parameter editing

3.2 Editing of pitch compensation data

See Figure 3-2 for the editing of pitch compensation data.

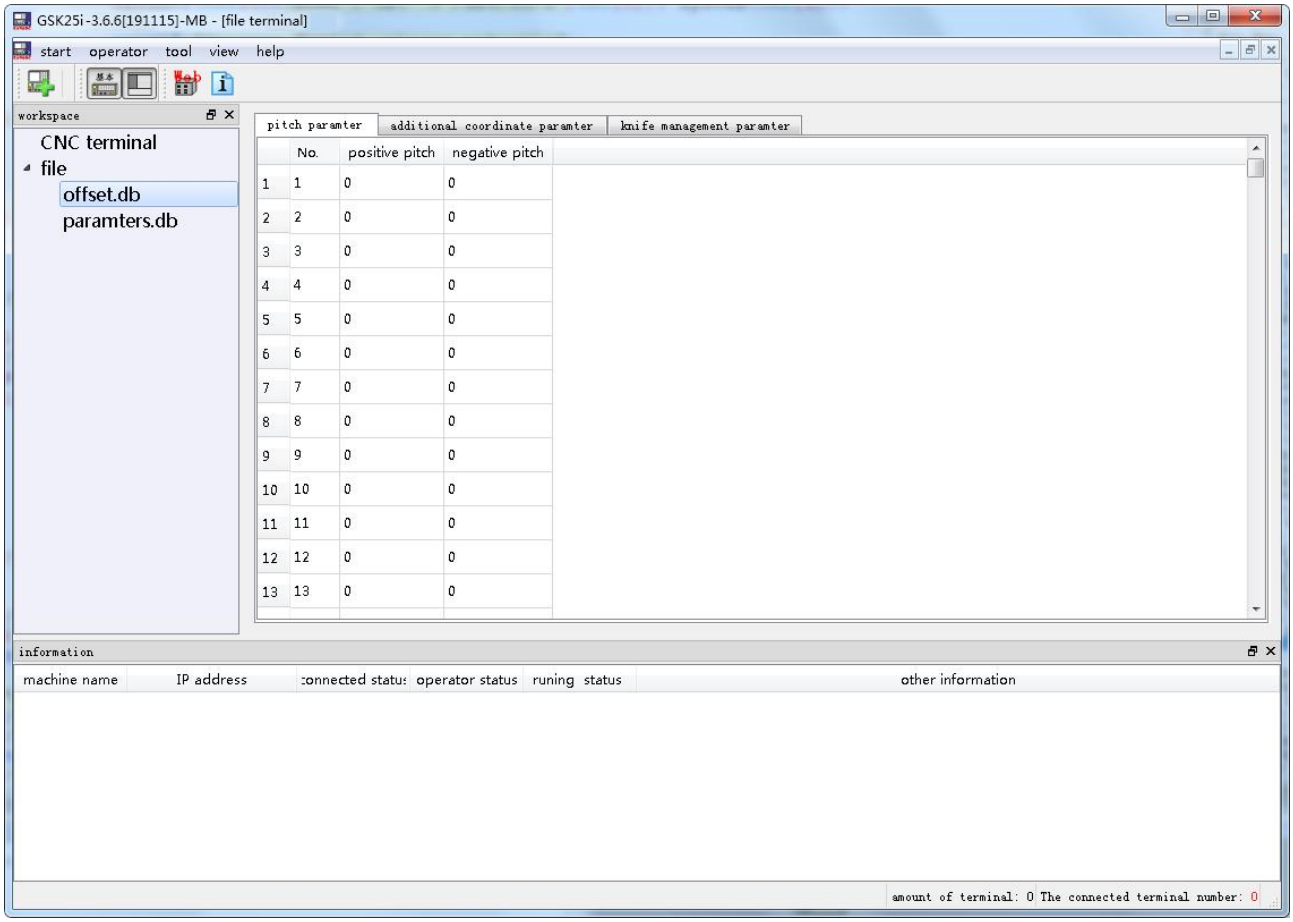

Fig. 3-2 Editing of pitch compensation data

Chapter 4 Parameter description

[Parameter Type]

System parameters can be divided into the following categories by parameter type (see Table 4-1).

Table 4-1 Data type and valid data scope

Data type	Valid data scope
Bit type	0 or 1
Axis type	0 or 1
Integer	-999999~999999
Integer axis type	-999999~999999
Real number	-999999.9999~999999.9999
Real number axis type	-999999.9999~999999.9999

The number of axle type parameters displayed is determined by the total number of axles set by # 800 parameter

[Parameter Description Format]

System parameters are described in the following format

Parameter number	Description of the parameter meaning

Attention columns will be available to remind users of matters requiring special attention

Note
1. Note 1
2. Note 2
3. Note 3
4. ……

4.1 Setting parameter (1~99)

	7#	6#	5#	4#	3#	2#	1#	0#
0001			SEQ					

[Data type] Bit type

[Data scope] 0 or 1

[Factory Default] 0 0 0 0 0 0 0 0

[Validity method] Effective Immediately

SEQ: Automatic insertion of sequence number

0: Do not proceed

1: Proceed

> Note
> The increment value of the sequence number is set in parameter #1621.

	7#	6#	5#	4#	3#	2#	1#	0#
0002					ILS			RDG

[Data type] Bit type

[Data scope] 0 or 1

[Factory Default] 0 0 0 0 0 0 0 0

[Validity method] Restart valid

RDG: Remote diagnosis

0: Do not proceed

1: Proceed

ILS: Boot screen selection

0: System default

1: User defined

4.2 Communication and configuration parameter (100~999)

	7#	6#	5#	4#	3#	2#	1#	#0
100	DSP	X8.4			ASF			A2D

[Data type] Bit type

[Data scope] 0 or 1

[Factory Default] 0 0 0 0 1 0 0 1

[Validity method] Restart valid

A2D: DSP load mode

0: DSP direct startup mode. For simulator loading.

1: Load DSP with system program

ASF: Automatically save previous current file in loading

0: No

1: Yes

DSP: Whether DSP applies the new architecture

0: No

1: Yes

X8.4: X8.4 emergency stop signal is valid

0: Valid

1: Invalid

101	Capacity of G code program content (10000 lines)	30

[Data type] Integer

[Data unit] 10000 lines

[Data scope] 20 ~ 45

[Validity method] Restart valid

102	Capacity of PLC memory (1000 lines)	3

[Data type] Integer

[Data unit] 1000 lines

[Data scope] 3 ~ 5

[Validity method] Restart valid

127	Ethernet IP Address Section 1	192
128	Ethernet IP Address Section 2	168
129	Ethernet IP Address Section 3	188
130	Ethernet IP Address Section 4	123

[Data type] Integer

[Data scope] 2~250

[Validity method] Reset valid

200	GSK-LINK communication cycle	1000

[Data type] Integer

[Data unit] us

[Data scope] 500 ~ 2000

[Validity method] Restart valid

Settable values: 500, 1000, 2000

201	Communication command time	100

[Data type] Integer

[Data unit] us

[Data scope] 1~2000

[Validity method] Restart valid

203	Cyclic communication data length (bytes)	26

[Data type] Integer

[Data unit] Byte

[Data scope] 8~30

[Validity method] Restart valid

204	Maximum number of re-transmissions per cycle	3

[Data type] Integer

[Data unit] Times

[Data scope] 0~32

[Validity method] Restart valid

205	Servo communication ignored	0

[Data type] Integer

[Data scope] 0 ~ 1

[Validity method] Effective Immediately

> Note
> When it is set to 1, the system will ignore servo network communication and is primarily used for commissioning.

206	Maximum error value allowed by system communication synchronization MST package	0

[Data type] Integer

[Data unit] Times

[Data scope] 1~8

[Validity method] Effective Immediately

207	Maximum error value allowed by system communication synchronization MDT package	2

[Data type] Integer

[Data unit] Times

[Data scope] 1~8

[Validity method] Effective Immediately

210	Number of re-transmissions allowed by GDT	3

[Data type] Integer

[Data unit] Times

[Data scope] 0~8

[Validity method] Effective Immediately

211	MDT package CRC check enable (1 enable)	0

[Data type] Integer

[Data unit]

[Data scope] 0 or 1

[Validity method] Effective Immediately

212	GDT package CRC check enable (1 enable)	0

[Data type] Integer

[Data unit]

[Data scope] 0 or 1

[Validity method] Effective Immediately

221	Number of slave station equipment	5

[Data type] Integer

[Data unit] Nos.

[Data scope] 1~16

[Validity method] Restart valid

222	Number of IO equipment	1

[Data type] Integer

[Data unit] Nos.

[Data scope] 1~8

[Validity method] Effective Immediately

225	Connection sequence number corresponding to the servo equipment	

[Data type] Axis type

[Data scope] 1~15

[Validity method] Effective Immediately

Note: The setting of the servo logical address is related to the servo network connection, the first slave station connected from the system P1 port is 1, and so on, the servo logical address is the corresponding set value; Usually, the control axis number is the same as the set value of the servo logic address.

226	Connection sequence number corresponding to the spindle equipment	

[Data type] Axis type

[Data scope] 1~15

[Validity method] Effective Immediately

Note: The setting of the servo logical address is related to the servo network connection, the first slave station connected from the system P1 port is 1, and so on, the servo logical address is the corresponding set value;

227	Connection sequence number corresponding to the IO equipment	

[Data type] Axis type

[Data scope] 1~15

[Validity method] Effective Immediately

Note: The setting of the servo logical address is related to the servo network connection, the first slave station connected from the system P1 port is 1, and so on, the servo logical address is the corresponding set value;

800	Select the number of axes controlled by the system	4

[Data type] Integer

[Data scope] 2~8

[Validity method] Restart valid

The number of control axes can be arbitrarily set within the factory limit. When the number of axes exceeds the factory limit, the set value will not be saved after restart.

801	Select the number of linkage axes in the system	4

[Data type] Integer

[Data scope] 2~8

[Validity method] Restart valid

The number of linkage axes can be arbitrarily set within the factory limit. When the number of axes exceeds the factory limit, the set value will not be saved after restart.

810	Screensaver wait time	0

[Data type] Integer

[Data unit] Min.

[Data scope] 0~9999

[Validity method] Effective Immediately

811	Interpolation period	2

[Data type] Real number

[Data unit] ms

[Data scope] 1~4

[Validity method] Restart valid

812	CNC interface refresh cycle (10 ms)	12

[Data type] Real number

[Data unit] ms

[Data scope] 1~20

[Validity method] Effective Immediately

4.3 Coordinate parameter (1000~1199)

	7#	6#	5#	4#	3#	2#	1#	0#
1000				EDC			ISC	

[Data type] Bit type

[Data scope] 0 or 1

[Factory Default] 0 0 0 0 0 0 1 0

[Validity method] Restart valid

ISC: Minimum moving unit

0: 0.001 mm or 0.001 deg

1: 0.0001 mm or 0.0001 deg

EDC: Whether the external deceleration function is used

0: Do not use

1: Use

	7#	6#	5#	4#	3#	2#	1#	0#
1001						SFD	DLZ	

[Data type] Bit type

[Data scope] 0 or 1

[Factory Default] 0 0 0 0 0 0 0 0

[Validity method] Reset valid

DLZ: No block reference point setting function

0: Invalid

1: Valid

SFD: Whether the reference point offset function is used

0: Do not use

1: Use

> Note
>
> This parameter is invalid when DLZ (N1001#1) parameter is set to 0 and valid when DLZ (N1001#1) is set to 1.
>
> When SFD (N1001.2) parameter is set to 1, the reference point offset for each axis in parameter N4120 is valid (currently this parameter is invalid).

	7#	6#	5#	4#	3#	2#	1#	0#
1002			EDN	EDP	HJZ			

[Data type] Bit type

[Data scope] 0 or 1

[Factory Default] 0 0 0 0 1 0 0 0

[Validity method] Reset valid

HJZ: When returning manually after the reference point is established

0: Via deceleration block

1: Fast positioning to reference point

This parameter is invalid when an absolute position detection device is used

EDP: External deceleration signal in axis forward direction

0: Fast and valid

1: Fast cutting feed is valid

EDN: External deceleration signal in axis reverse direction

0: Fast and valid

1: Fast cutting feed is valid

	7#	6#	5#	4#	3#	2#	1#	0#
1004	HIDEn	THIDn	ZMIn					

[Data type] Axis type

[Data scope] 0 or 1

[Factory Default] 0 0 0 0 0 1 0 0

[Validity method] Reset valid

ZMIn: Set homing direction of each axis (will affect which side of the motion direction the reverse gap exists on)

0: Reverse direction

1: Forward direction

THIDn: Whether the lathe settings hide the axis

0: Do not hide

1: Hide

HIDEn: Whether the CNC settings hide the axis

0: Do not hide

1: Hide

1020	Name of programming axis for each axis	88

[Data type] Integer axis type

[Data scope] 65~67, 85~90

[Validity method] Effective Immediately

Note: The display name is its ASCII code and the allowed values are X 88, Y 89, Z 90, A 65, B 66, C 67, U 85, V 86, W 87.

1021	Subscript for axis name	32

[Data type] Integer axis type

[Data scope] 0~90

[Validity method] Effective Immediately

Note: 0~9 are numbers (0 set is not shown actually), 65 ~ 90 are ASCII

codes, and 32 is blank.

	7#	6#	5#	4#	3#	2#	1#	0#
1023		RABx	RRLx		RHAY	ROSn	ROTn	

[Data type] Axis type

[Data scope] 0 or 1

[Factory Default] 0 0 0 0 0 0 0 0

[Validity method] Reset valid

ROTn: Whether each axis is a rotating axis or a translating axis

0: Translating

1: Rotating

ROSn: Coordinate axis type of rotating axis

0: Rotating axis type

1: Linear axis type

RHAY: Rotating axis type interpolation mode

0: Nearby

1: Not nearby

RRLx: Relative coordinate display

0: Command value

1: Within 360 degrees

RABx: Absolute coordinate display

0: Command value

1: Within 360 degrees

ROSn is used in combination with ROTn

0 0 linear axis type

1) Imperial/metric conversion.

2) All coordinate values are linear (not cyclic at 0 ~ 360).

3) Storage type pitch error compensation is linear axis type.

0 1 Rotating axis type

1) No imperial/metric conversion.

2) The coordinate value of the machine is in the range of 0 ~ 360 degrees.

Parameter RRLx and RABx can be selected to determine the relative coordinate values and absolute coordinates. Whether it is displayed by value or between 0 and 360 degrees.

3) Storage type pitch error compensation is rotating axis type.

4) Automatic return to the reference position (G28 G30), return direction from reference position

Start moving no more than 1 circle.

1 0 setting is invalid

1 1 Linear axis type

1) No imperial/metric conversion.

2) Machine coordinate values, relative coordinate values and absolute coordinate values are linear axis type (not shown between 0 and 360 degrees).

3) The rotating axis moves in the direction assigned by the command value symbol.

4) Storage type pitch error compensation is linear axis type.

5) Cannot be used in conjunction with the cycling function of the rotating axis and the indexing table function.

1024	Attributes of axes in the basic coordinate system	0

[Data type] Integer axis type

[Data scope] 0~7

[Validity method] Reset valid

Setting value	Meaning
0	Neither the basic Axis 3 nor the parallel axis
1	Axis X of basic Axis 3
2	Axis Y of basic Axis 3
3	Axis Z of basic Axis 3
5	Parallel axis of Axis X
6	Parallel axis of Axis Y
7	Parallel axis of Axis Z

	7#	6#	5#	4#	3#	2#	1#	0#
1030	ITI	IDX						

[Data type] Bit type

[Data scope] 0 or 1

[Factory Default] 0 0 0 0 0 0 0 0

[Validity method] Reset valid

IDX: Indexing sequence of indexing table

0: Type A

1: Type B

ITI: Indexing function of indexing table

0: Invalid

1: Valid

	7#	6#	5#	4#	3#	2#	1#	0#
1031								G_RET

[Data Type] bit-type

[Data scope] 0 or 1

[Factory Default] 0 0 0 0 0 0 0 0

[Validity method] Effective Immediately

G_RET: Whether the cursor always returns to the program header after reset

0: No (conditional)

1: Yes

> Note
> When G_RET (N1031 # 0) is set to 0, the system is reset in the editing mode and the interface with the program displayed, and the cursor returns to the program header.
> When G_RET (N1031 # 0) is set to 1, the reset system cursor returns to the program header in any manner and arbitrary interface.

1040	Origin offset of external workpiece	0

[Data type] Real number axis type

[Data unit] mm

[Data scope] -999999.9999~999999.9999

[Validity method] Effective Immediately

1041	Origin offset of workpiece coordinate system 1 (G54)	0

[Data type] Real number axis type

[Data unit] mm

[Data scope] -999999.9999~999999.9999

[Validity method] Effective Immediately

1042	Origin offset of workpiece coordinate system 2 (G55)	0

[Data type] Real number axis type

[Data unit] mm

[Data scope] -999999.9999~999999.9999

[Validity method] Effective Immediately

1043	Origin offset of workpiece coordinate system 3 (G56)	0

[Data type] Real number axis type

[Data unit] mm

[Data scope] -999999.9999~999999.9999

[Validity method] Effective Immediately

1044	Origin offset of workpiece coordinate system 4 (G57)	0

[Data type] Real number axis type

[Data unit] mm

[Data scope] -999999.9999~999999.9999

[Validity method] Effective Immediately

1045	Origin offset of workpiece coordinate system 5 (G58)	0

[Data type] Real number axis type

[Data unit] mm

[Data scope] -999999.9999~999999.9999

[Validity method] Effective Immediately

1046	Origin offset of workpiece coordinate system 6 (G59)	0

[Data type] Real number axis type

[Data unit] mm

[Data scope] -999999.9999~999999.9999

[Validity method] Effective Immediately

1050	Coordinate value of the first reference point of each axis in the mechanical coordinate system	0

[Data type] Real number axis type

[Data unit] mm

[Data scope] -999999.9999~999999.9999

[Validity method] Reset valid

1051	Coordinate value of the second reference point of each axis in the mechanical coordinate system	0

[Data type] Real number axis type

[Data unit] mm

[Data scope] -999999.9999~999999.9999

[Validity method] Reset valid

1052	Coordinate value of the third reference point of each axis in the mechanical coordinate system	0

[Data type] Real number axis type

[Data unit] mm

[Data scope] -999999.9999~999999.9999

[Validity method] Reset valid

1053	Coordinate value of the fourth reference point of each axis in the mechanical coordinate system	0

[Data type] Real number axis type

[Data unit] mm

[Data scope] -999999.9999~999999.9999

[Validity method] Reset valid

1060	The amount of movement per rotation of the feed axis	Linear axis 8/rotating axis 2

[Data type] Real number axis type

[Data unit] Mm or degrees

[Data scope] 0~999.9999

[Validity method] Reset valid

1068	Rotation angle per rotation of rotating axis	360

[Data type] Real number axis type

[Data unit] Degree

[Data scope] 0.001~9999.9999

[Validity method] Reset valid

Note: This parameter is used for cylindrical interpolation.

	7#	6#	5#	4#	3#	2#	1#	0#
1070		LZR		BAR	OT3	OT2		OUT

[Data type] Bit type

[Data scope] 0 or 1

[Factory Default] 0 1 0 0 0 0 0 0

[Validity method] Reset valid

OUT: Prohibited area for storage travel detection 2

0: Inside

1: Outside

OT2: Whether each axis checks storage travel detection 2

0: Do not check

1: Check

OT3: Whether each axis checks storage travel inside detection 3

0: Do not check

1: Check

BAR: Chuck tailstock switch

0: Invalid

1: Valid

LZR: Perform travel 1 detection before the machine coordinate system is established

0: Do not check

1: Check

1080	Boundary coordinate value in forward direction of storage travel detection 1 of each axis	9999

[Data type] Real number axis type

[Data unit] mm

[Data scope] -999999.9999~999999.9999

[Validity method] Reset valid

1081	Boundary coordinate value in reverse direction of storage travel detection 1 of each axis	-9999

[Data type] Real number axis type

[Data unit] mm

[Data scope] -999999.9999~999999.9999

[Validity method] Reset valid

1082	Boundary coordinate value in forward direction of storage travel detection 2 of each axis	9999

[Data type] Real number axis type

[Data unit] mm

[Data scope] -999999.9999~999999.9999

[Validity method] Reset valid

1083	Boundary coordinate value in reverse direction of storage travel detection 2 of each axis	-9999

[Data type] Real number axis type

[Data unit] mm

[Data scope] -999999.9999~999999.9999

[Validity method] Reset valid

1084	Boundary coordinate value in forward direction of storage travel detection 3 of each axis	9999

[Data type] Real number axis type

[Data unit] mm

[Data scope] -999999.9999~999999.9999

[Validity method] Reset valid

1085	Boundary coordinate value in reverse direction of storage travel detection 3 of each axis	-9999

[Data type] Real number axis type

[Data unit] mm

[Data scope] -999999.9999~999999.9999

[Validity method] Reset valid

1086	Boundary coordinate value II in forward direction of storage travel detection 1 of each axis	9999

[Data type] Real number axis type

[Data unit] mm

[Data scope] -999999.9999~999999.9999

[Validity method] Reset valid

Note

When the PLC signal G007 # 6 EXLM is set to "1", the storage travel limit boundary values set by #1086 and #1087 are used.

1087	Boundary coordinate value II in reverse direction of storage travel detection 1 of each axis	-9999

[Data type] Real number axis type

[Data unit] mm

[Data scope] -999999.9999~999999.9999

[Validity method] Reset valid

> Note
> When the PLC signal G007.6 EXLM is set to "1", the storage travel limit boundary values set by #1086 and #1087 are used.

1101	Choice of chuck shape	

[Data type] Real number

[Data scope] 0~1000000

[Validity method] Reset valid

1102	Length L of the chuck jaw	0

[Data type] Real number

[Data unit] mm

[Data scope] 0~1000000

[Validity method] Reset valid

1103	Radius W of the chuck jaw	0

[Data type] Real number

[Data unit] mm

[Data scope] 0~1000000

[Validity method] Reset valid

1104	Clamping length L1 of the chuck jaw	0

[Data type] Real number

[Data unit] mm

[Data scope] 0~1000000

[Validity method] Reset valid

1105	Clamping opening radius W1 of the chuck jaw	0

[Data type] Real number

[Data unit] mm

[Data scope] 0~1000000

[Validity method] Reset valid

1106	Position CX of the chuck	0

[Data type] Real number

[Data unit] mm

[Data scope] 0~1000000

[Validity method] Reset valid

1107	Position CZ of the chuck	0

[Data type] Real number

[Data unit] mm

[Data scope] 0~1000000

[Validity method] Reset valid

1111	Length L of the tailstock	0

[Data type] Real number

[Data unit] mm

[Data scope] 0~1000000

[Validity method] Reset valid

1112	Diameter D of the tailstock	0

[Data type] Real number

[Data unit] mm

[Data scope] 0~1000000

[Validity method] Reset valid

1113	Length L1 of the tailstock	0

[Data type] Real number

[Data unit] mm

[Data scope] 0~1000000

[Validity method] Reset valid

1114	Diameter D1 of the tailstock	0

[Data type] Real number

[Data unit] mm

[Data scope] 0~1000000

[Validity method] Reset valid

1115	Length L2 of the tailstock	0

[Data type] Real number

[Data unit] mm

[Data scope] 0~1000000

[Validity method] Reset valid

1116	Diameter D2 of the tailstock	0

[Data type] Real number

[Data unit] mm

[Data scope] 0~1000000

[Validity method] Reset valid

1117	Diameter D3 of the tailstock tip	0

[Data type] Real number

[Data unit] mm

[Data scope] 0~1000000

[Validity method] Reset valid

1118	Position TZ of the tailstock tip	0

[Data type] Real number

[Data unit] mm

[Data scope] 0~1000000

[Validity method] Reset valid

4.4 Feed speed parameter (1200~1399)

	7#	6#	5#	4#	3#	2#	1#	0#
1200		RDR		RF0				RPD

[Data type] Bit type

[Data scope] 0 or 1

[Factory Default] 0 0 0 0 0 0 0 0

[Validity method] Reset valid

RPD: Manually fast from power-on to home

0: Invalid

1: Valid

RF0: When the fast feed rate is F0

0: Do not stop

1: Stop

RDR: In fast feed

0: Dry run is invalid

1: Dry run is valid

1209	Default to high-speed machining mode in system power-on	0

[Data type] Real number

[Data scope] 0~3

[Validity method] Reset valid

1210	Dry run speed (common to all axes)	4000

[Data type] Real number

[Data unit] mm/min

[Data scope] 0~1000000

[Validity method] Reset valid

> Note
> Set the dry run speed when the feed rate is 100%.

1211	Default cutting feed speed in automatic mode (common to all axes)	100

[Data type] Real number

[Data unit] mm/min

[Data scope] 0~10000

[Validity method] Restart valid

> Note
> Default command feed rate value when the cutting feed rate is not commanded.

1224	Maximum cutting feed composite speed (common to all axes)	10000

[Data type] Real number

[Data unit] mm/min

[Data scope] 0~1000000

[Validity method] Reset valid

1225	Maximum cutting feed rate for each axis in automatic mode	Linear axis 10000/rotating axis 4000

[Data type] Real number axis type

[Data unit] mm/min or degree /min

[Data scope] 0~1000000

[Validity method] Reset valid

Note

1. The maximum cutting feed rate for each axis is set in automatic mode, and the feed rate for each axis is limited the set value during cutting.
2. Parameter is valid only in linear interpolation. Circular interpolation, cylindrical interpolation and other speed limits can use parameter 1224.
3. When the set value of each axis is 0, and the relevant axis movement is involved, the machine will not move, and the program will run in the current block all the time.

1226	Fast moving speed of each axis in automatic mode	Linear axis 15000/rotating axis 4000

[Data type] Real number axis type

[Data unit] Mm/min degrees/min

[Data scope] 0~1000000

[Validity method] Reset valid

Note

Set the fast-moving speed when the fast rate is 100%.

1231	F0 speed of fast-moving rate (common to all axes)	100

[Data type] Real number

[Data unit] mm/min or degree /min

[Data scope] 0~1000000

[Validity method] Reset valid

1232	Manual (JOG feed) feed speed of each axis	1000

[Data type] Real number axis type

[Data unit] mm/min or degree /min

[Data scope] 0~1000000

[Validity method] Reset valid

Note
Set the JOG feed rate when the manual feed rate is 100%.

1233	Manual fast-moving speed of each axis	10000

[Data type] Real number axis type

[Data unit] mm/min or degree /min

[Data scope] 0~1000000

[Validity method] Reset valid

1234	Homing FL speed of each axis	Linear axis 300/rotating axis 75

[Data type] Real number axis type

[Data unit] mm/min or degree /min

[Data scope] 0~15000

[Validity method] Reset valid

1235	Homing speed of each axis	Linear axis 4000/rotating axis 2000

[Data type] Real number axis type

[Data unit] mm/min or degree /min

[Data scope] 0~1000000

[Validity method] Reset valid

1236	Second FL speed of each axis for homing	Linear axis 7/rotating axis 2

[Data type] Real number axis type

[Data unit] mm/min or degree /min

[Data scope] 0~15000

[Validity method] Reset valid

1239	Maximum speed of manual feed	10000

[Data type] Real number

[Data unit] mm/min or degree /min

[Data scope] 0~1000000

[Validity method] Reset valid

1240	Maximum speed for single-step run	10000

[Data type] Real number

[Data unit] mm/min or degree /min

[Data scope] 0~1000000

[Validity method] Reset valid

1241	Maximum speed of MPG feed	15000

[Data type] Real number

[Data unit] mm/min or degree /min

[Data scope] 0~1000000

[Validity method] Reset valid

1242	Handwheel simulates the maximum number of rate pulses	150

[Data type] Real number

[Data unit] PLUS

[Data scope] 0~500

[Validity method] Reset valid

1250	External deceleration speed in cutting feed	1000

[Data type] Real number axis type

[Data unit] mm/min or degree /min

[Data scope] 0~1000000

[Validity method] Reset valid

1251	External deceleration speed in fast-moving	1000

[Data type] Real number axis type

[Data unit] mm/min or degree /min

[Data scope] 0~1000000

[Validity method] Reset valid

1260	Safe speed limit in fast-moving and cutting feed	100

[Data Type] real number axis type

[Data unit] mm/min or degree /min

[Data scope] 0~10000

[Validity method] Reset valid

Notes:
Maximum speed of fast-moving and cutting feed when PLC signal G019#6 FVL is set to "1".

4.5 Interpolation and acceleration/deceleration control parameters (1400~1599)

	7#	6#	5#	4#	3#	2#	1#	0#
1400	HRE	PACD	PPCK	SAMP	REC+		JRV	THD

[Data Type] bit-type

[Data scope] 0 or 1

[Factory Default] 0 1 0 0 0 0 0 0

[Validity method] Reset valid

THD: Manual feed in manual mode

0: Invalid

1:Valid

JRV: manual feed mode

0: Feed per minute

1: Feed per rotation

REC +: Accumulation of operation control alarm record

0: Off

1: Open

SAMP: Operation control alarm recording function

0: Off

1: Open

PPCK: In-place detection

0: Do not conduct

1: Conduct

PACD: Forward acceleration/deceleration mode

0: Linear type

1: S type

HRE: Handwheel analog function

0: Unidirectional

1: Bidirectional (only G1G2G3 is valid)

	7#	6#	5#	4#	3#	2#	1#	0#
1401	ALS	ATF		WFM		DEC		LRP

[Data type] Bit type

[Data scope] 0 or 1

[Factory Default] 0 0 0 1 0 0 0 0

[Validity method] Reset valid

LRP: G00 linear or nonlinear positioning

0: Nonlinear

1: Linear

DEC: Increase deceleration stop efficiency

0: Invalid

1:Valid

WFM: Machining in MPG interpolation

0: Adopt reservoir method

1: Adopt real-time method

ATF: Corner feed rate

0: Inside corner is valid

1: Both inside and outside corners are valid.

ALS: Automatic corner feed function. Used to compensate arc cutting speed in tool radius compensation.

0: Invalid

1:Valid

	7#	6#	5#	4#	3#	2#	1#	0#
1403			RCOK	RBK	HSEL	HXS2	HXS	

[Data Type] bit-type

[Data scope] 0 or 1

[Factory Default] 0 0 1 0 0 0 1 0

[Validity method] Reset valid

HXS: Rotation direction of MPG and each axis

0: Different

1: Same

HXS2: Rotation direction of the second MPG and each axis

0: Different

1: Same

HXEL: Second MPG function

0: Invalid

1:Valid

RBK: Cutting and fast reverse gap compensation

0: Not respectively

1: Respectively

RCOK: Reverse gap compensation

0: Do not conduct

1: Conduct

1405	Number of pre-read blocks during pre-read machining	10

[Data type] Integer

[Data unit] Block

[Data scope] 0~2000

[Validity method] Reset valid

1406	Number of pre-read blocks during high-speed interpolation pre-read machining	1000

[Data type] Integer

[Data unit] Block

[Data scope] 0~2000

[Validity method] Reset valid

1407	Reserve	

[Data type]

[Data unit]

[Data scope]

[Validity method]

1408	Reserve	

[Data type]

[Data unit]

[Data scope]

[Validity method]

1409	Number of forward-looking program blocks when forward-looking is used	35

[Data type] Integer

[Data unit] Block

[Data scope] 1~2000

[Validity method] Reset valid

Note
Set the number of forward-looking program blocks when forward-looking is used.

1410	Acceleration/deceleration S-type acceleration/deceleration time constant T1 before fast feed	64

[Data type] Integer axis type

[Data unit] ms

[Data scope] 1~4000

[Validity method] Reset valid

Use P+ parameter number to indicate the parameter value of the corresponding parameter number, for example, P1233 indicates parameter 1233. The calculation method for S-type acceleration/deceleration is shown in the following figure, where t1 is the uniform acceleration time, t2 is the increasing and decreasing acceleration time, and Am is the maximum acceleration.

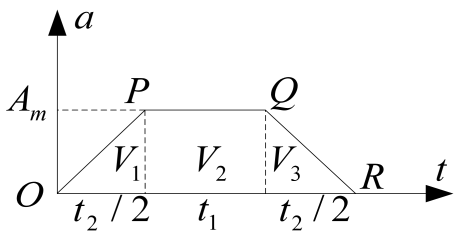

As shown above, trapezoidal area: $V_m = \frac{(t_1+t_1+t_2)*A_m}{2}$

The calculation method for maximum acceleration is: $A_m = \frac{2V_m}{(2t_1+t_2)}$

The calculation method for increasing acceleration is: $J_m = \frac{2A_m}{t_2}$

For linear acceleration and deceleration, it can be understood as a special case of S-type acceleration and deceleration at t2=0.

Therefore, the formula for calculating the maximum acceleration of acceleration and deceleration S-type before G00 fast-moving is: $A_{m00} = \frac{2\times P_{1226}}{(2\times P_{1410}+P_{1411})}$, the calculation of the maximum acceleration of acceleration and deceleration S-type before G00 fast-moving $J_{m00} = \frac{2A_{m00}}{P_{1411}}$.

> Note
> In practical application, attention shall be paid to the unit conversion according to the unit of the parameter when the formula is applied to calculate the acceleration or increasing acceleration.

1411	Fast feed S-type acceleration/deceleration time constant T2.	96

[Data type] Integer axis type

[Data unit] ms

[Data scope] 1~4000

[Validity method] Reset valid

> Note
> In practical application, attention shall be paid to the unit conversion according to the unit of the parameter when the formula is applied to calculate the acceleration or increasing acceleration.

1412	Maximum rotation speed of speed control r/min	100

[Data type] Integer

[Data unit] r/min

[Data scope] 1~4000

[Validity method] Reset valid

1413	Maximum acceleration of speed control r/s*s	20

[Data type] Integer

[Data unit] r/s*s

[Data scope] 1~4000

[Validity method] Reset valid

1440	Maximum acceleration	Linear axis 0.5/rotating axis 125

[Data type] Real number axis type

[Data unit] m/(s*s), rotating axis: degrees/(s*s), generally rotating axis value is 250 times of translating axis

[Data scope] 0~25000

[Validity method] Reset valid

> Note
> It is only valid for linear acceleration and deceleration control.

1442	Maximum acceleration of circular interpolation feed	0.2

[Data type] Real number

[Data unit] m/(s*s)

[Data scope] 0~25000

[Validity method] Reset valid

1444	Default acceleration for mechanical homing	Linear axis 0.139/rotating axis 80

[Data type] Real number axis type

[Data unit] m/(s*s), rotating axis: degrees/(s*s), generally rotating axis value is 250 times of translating axis

[Data scope] 0~25000

[Validity method] Reset valid

1445	Acceleration of deceleration during pause or RESET in operation	1.5

[Data type] Real number

[Data unit] m/(s*s)

[Data scope] 0~25000

[Validity method] Reset valid

1446	MPG acceleration	1

[Data type] Real number

[Data unit] m/(s*s)

[Data scope] 0~25000

[Validity method] Reset valid

1447	Manual acceleration	1

[Data type] Real number

[Data unit] m/(s*s)

[Data scope] 0~25000

[Validity method] Reset valid

1448	Proportion of manual linkage movement	0

[Data type] Real number

[Data unit] mm

[Data scope] -999999.9999~999999.9999

[Validity method] Reset valid

1472	Circular interpolation control accuracy	0.001

[Data type] Real number

[Data unit] mm

[Data scope] 0~1

[Validity method] Reset valid

1473	Maximum contour error of system	0.001

[Data type] Real number

[Data unit] mm

[Data scope] 0~1

[Validity method] Reset valid

1480	Acceleration and deceleration S-type time constant T1 before cutting feed	64

[Data type] Integer axis type

[Data unit] ms

[Data scope] 1~4000

[Validity method] Reset valid

The formula for calculating the maximum acceleration of acceleration and deceleration S-type before G01 fast-moving is: $A_{m01} = \frac{2 \times P_{1225}}{(2 \times P_{1480} + P_{1481})}$, the calculation of the maximum acceleration of acceleration and deceleration S-type before G01 fast-moving $J_{m01} = \frac{2A_{m01}}{P_{1481}}$.

> Note
>
> In practical application, attention shall be paid to the unit conversion according to the unit of the parameter when the formula is applied to calculate the acceleration or increasing acceleration.

1481	Acceleration and deceleration S-type time constant T2 before cutting feed	96

[Data type] Integer axis type

[Data unit] ms

[Data scope] 1~4000

[Validity method] Reset valid

1493	Non-orthogonal inclination angle	0.000

[Data type] Real number

[Data unit] m/(S*S)

[Data scope] 0~25000

[Validity method] Reset valid

> Note
> In practical application, attention shall be paid to the unit conversion according to the unit of the parameter when the formula is applied to calculate the acceleration or increasing acceleration.

1494	Reserve	10

[Data type] Real number

[Data unit] deg

[Data scope] 0~30

[Validity method] Reset valid

1495	Reserve	150

[Data type] Real number

[Data unit] deg

[Data scope] 120~180

[Validity method] Reset valid

1500	Post acceleration and deceleration time constant	0

[Data type] Integer axis type

[Data unit] ms

[Data scope] 0~64

[Validity method] Effective Immediately

1501	Allowable speed change amount of feed axis during movement (mm/min)	200

[Data type] Real number

[Data unit] mm/min

[Data scope] 0~1000

[Validity method] Reset valid

1505	Minimum speed limit for circular interpolation	200

[Data type] Real number

[Data unit] mm/min

[Data scope] 0~9999.9999

[Validity method] Reset valid

1506	Maximum error between endpoint of spiral or cone interpolation and command endpoint	1

[Data type] Real number axis type

[Data unit] mm/min

[Data scope] 0~9999.9999

[Validity method] Reset valid

1510	Judgment angle range for inside corner rate	178

[Data type] Real number

[Data unit] Degree

[Data scope] 2~178

[Validity method] Reset valid

1511	Rate amount of inside corner rate	50

[Data type] Real number

[Data unit] %

[Data scope] 1~100

[Validity method] Reset valid

1512	Starting distance of inside corner rate	1

[Data type] Real number

[Data unit] mm

[Data scope] 0~5000.0000

[Validity method] Reset valid

1513	End distance of inside corner rate	1

[Data type] Real number

[Data unit] mm

[Data scope] 0~5000.0000

[Validity method] Reset valid

1550	Acceleration and deceleration constant (ms) for bidirectional handwheel analog	30

[Data type] Real number

[Data unit] Interpolation period

[Data scope] 1~100 (the smaller the value, the shorter the acceleration time)

[Validity method] Reset valid

1551	Step rate of bidirectional handwheel analog	1

[Data type] Real number

[Data unit] Multiple

[Data scope] 0.1~10

[Validity method] Reset valid

4.6 Show editing parameter (1600~1799)

1600	Language selection (0: Chinese/1: English/2: Other	0

[Data type] Real number

[Data unit]

[Data scope] 0~2

[Validity method] Restart valid

	7#	6#	5#	4#	3#	2#	1#	0#
1601							PSORT	DIAL

[Data type] Bit type

[Data scope] 0 or 1

[Factory Default] 0 0 0 1 0 0 0 0

[Validity method] Restart valid

DIAL: Dialog function switch

0: Off

1: On

PSORT: Parameter classification function

0: Off

1: On

	7#	6#	5#	4#	3#	2#	1#	0#
1602	PUP	MNT	RevD3	RevT	T SEC	CLR T		G P L

[Data type] Bit type

[Data scope] 0 or 1

[Factory Default] 0 0 0 0 0 0 00

[Validity method] Effective Immediately

GPL: Graphic drawing mode

0: Point

1: Line

CLR T: Cumulative time data setting

0: Not change

1: Zero clearing after restart

TSEC: Runtime display type

0: Cumulative power-on

1: Cumulative machining

RevT: Reserve tool type

0: No

1: Yes

RevD3: Reserve stereo

MTN: Maintenance function

0: Off

1: Open

PUP: System power-on operation record

0: Off

1: Open

	7#	6#	5#	4#	3#	2#	1#	0#
1605	DALC	NPA	RTCP	SPDx		MKP		DPG

[Data type] Bit type

[Data scope] 0 or 1

[Factory Default] 0 0 0 0 0 0 1 1

[Validity method] Effective Immediately

DPG: Drawing analog function

0: Invalid

1:Valid

MKP: MDI program when executing M02 M30% under MDI

0: Do not delete automatically

1: Delete automatically

SPDx: Multi-spindle speed is displayed on the right side of the program position

0: No

1: Yes

RTCP: RTCP absolute coordinate display

0: Actual position

1: Program position

NPA: Whether it switches to alarm screen when an alarm is given

0: No

1: Yes

DALC: Absolute coordinate display

0: Actual position

1: Program position

	7#	6#	5#	4#	3#	2#	1#	0#
1609	MARO			GCRC		GDGN	BGDN	FCRC

[Data type] Bit type

[Data scope] 0 or 1

[Factory Default] 1 0 0 0 0 0 0 0

[Validity method] Effective Immediately

FCRC: Whether the copied file needs to be verified

0: Yes

1: No

BGDN: Alarm state diagnosis data output

0: Invalid

1:Valid

GDGN: Decoding record output of alarm state G code

0: Invalid

1:Valid

GCRC: Whether summation check is valid

0: Invalid

1:Valid

MARO: Abbreviation for macroprogram statement

0: Invalid

1:Valid

	7#	6#	5#	4#	3#	2#	1#	0#
1610	FCASE			NE9				NE8

[Data type] Bit type

[Data scope] 0 or 1

[Factory Default] 0 0 0 1 0 0 0 1

[Validity method] Effective Immediately

NE8: Whether the editing of program number 8000-8999 subprogram is prohibited

0: Not prohibited

1: Prohibited

The following editing is not allowed when it is prohibited

Deletion of program (O8000-O8999 cannot be deleted)

Output of the program

Editing of logged-in program

Program login

Program display

NE9: Whether the editing of program number 9000-9999 subprogram is prohibited

0: Not prohibited

1: Prohibited

The following editing is not allowed when it is prohibited

Deletion of program (O9000-O9999 cannot be deleted)

Output of the program

Editing of logged-in program

Program login

Program display

FCASE: Abbreviation for macroprogram statement

0: Turn it off or not

1: Restart for execution once

1621	The incremental value when the sequence number is automatically inserted	10

[Data type] Integer

[Data scope] 0~9999

[Validity method] Effective Immediately

1640	Number of parts to be processed 1	0

[Data type] Integer

[Data scope] 0~999999

[Validity method] Effective Immediately

1641	Number of parts to be processed 2	0

[Data type] Integer

[Data scope] 0~999999

[Validity method] Effective Immediately

1642	Number of parts to be processed 3	0

[Data type] Integer

[Data scope] 0~999999

[Validity method] Effective Immediately

	7#	6#	5#	4#	3#	2#	1#	0#
1687						DEF3	DEF2	DEF1

[Data Type] bit-type

[Data scope] 0 or 1

[Factory Default] 0 0 0 0 0 0 0 1

[Validity method] Effective Immediately

> Note
> DEF1-DEF3, default scheme for color configuration, all default bits are 0, and DEF1 is valid.

	7#	6#	5#	4#	3#	2#	1#	0#
1688	POS	PROG	OFST	SYS	INFO	HELP	GRP	CUS

[Data Type] bit-type

[Data scope] 0 or 1

[Factory Default] 0 0 0 0 0 0 0 0

[Validity method] Restart valid

Initial interface selection for power-on display			**Default Value**
BIT0	CUS	Custom interface	
BIT1	GRP	Graphical interface	
BIT2	HELP	Help interface	
BIT3	INFO	Information interface	
BIT4	SYS	System interface	
BIT5	OFST	Offset setting interface	
BIT6	PROG	Program interface	
BIT7	POS	Position interface	

4.7 Programming parameter (1800~1999)

1800	G80	G50	G69	G15	G50.1			DPI

[Data type] Bit type

[Data scope] 0 or 1

[Factory Default] 0 0 0 0 0 0 0 1

[Validity method] Effective Immediately

DPI: Decimal point omitted when programming

0: Considered as minimum setting unit

1: Considered as mm/sec

G50.1: G51.1 modal at reset

0: Clear modal

1: Do not clear modal

G15: G16 modal at reset

0: Clear modal

1: Do not clear modal

G69: G68 modal at reset

0: Clear modal

1: Do not clear modal

G50: G51 modal at reset

0: Clear modal

1: Do not clear modal

G80: Fixed cyclic modal at reset

0: Clear modal

1: Do not clear modal

	7#	6#	5#	4#	3#	2#	1#	0#
1801			G43.8		G91	G19	G18	G01

[Data type] Bit type

[Data scope] 0 or 1

[Factory Default] 0 0 0 0 0 0 0 0

[Validity method] Effective Immediately

G01: Modal in power-on or clearing state

0: G00 mode

1: G01 mode

G18, G19: Plane selection in power-on or clearing state

G19	**G18**	**Plane selection**
0	0	G17
0	1	G18
1	0	G19

G19	**G18**	**Plane selection**
0	0	G17
0	1	G18
1	0	G19

G91: Setting in power-on or clearing state

0: G90 mode

1: G91 mode

G91: State setting in power-on

0: G43.8 mode

1: G43.7 mode

	7#	6#	5#	4#	3#	2#	1#	0#
1803		M3B						BCOD

[Data type] Bit type

[Data scope] 0 or 1

[Factory Default] 0 1 0 0 0 0 0 0

[Validity method] Effective Immediately

BCOD: The 2nd auxiliary function

0: Invalid

1:Valid

M3B: Number of M codes that can be commanded in a program

0: 1

1: Up to 3

1810	Allowable error of circular arc radius	0.01

[Data type] Real number

[Data unit] mm

[Data scope] 0.0005~0.1

[Validity method] Effective Immediately

1820	The sequence number compared with the N number stopped	0

[Data type] Integer type

[Data unit]

[Data scope] 0~999999

[Validity method] Effective Immediately

1822	Name of the 2nd auxiliary function	66

[Data type] Integer type

[Data unit]

[Data scope] 0~99

[Validity method] Effective Immediately

This parameter sets which of the addresses A, B, C, U, V, W will assign the 2nd auxiliary function. However, the 2nd auxiliary function is invalid when setting the address to be used as the axis name.

Command address	A	B	C	U	V	W
Set value	65	66	67	85	86	87

When a value other than the above is set, it becomes Address B. However, in the case of T series, the names U, V, W may be used only in the G code system B or C. When the values of 85 to 87 are set in this parameter by the G code system A, the command address of the 2nd auxiliary function becomes B.

	7#	6#	5#	4#	3#	2#	1#	0#
1850		XSC			SCL			RIN

[Data type] Bit type

[Data scope] 0 or 1

[Factory Default] 0 0 0 0 1 0 0 0

[Validity method] Effective Immediately

RIN: Coordinate rotation angle

0: Absolute coordinate command

1: G90/G91 command

SCL: Zoom function

0: Invalid

1:Valid

XSC: Zoom by each axis

0: Invalid (assigned with P)

1: Valid (assigned with IJK)

1860	Rotation angle used when there is no rotation angle command in coordinate rotation	0

[Data type] Real number

[Data unit] deg

[Data scope] -360.000 ~ 360.000

[Validity method] Effective Immediately

1861	Zoom rate used when there is no zoom command rate	1

[Data type] Real number

[Data scope] 0~999999.9999

[Validity method] Effective Immediately

1862	Zoom rate of each axis	1

[Data type] Real number axis type

[Data scope] -999999.9999– 999999.9999

[Validity method] Effective Immediately

	7#	6#	5#	4#	3#	2#	1#	0#
1870	G53							MDL

[Data type] Bit type

[Data scope] 0 or 1

[Factory Default] 0 0 0 0 0 0 0 0

[Validity method] Effective Immediately

MDL: Unidirectional positioning G code (G60)

0: Not set as modal code

1: Modal code

G53: Way for G53 returning to machine position

0: G00

1: G01

1880	Direction of unidirectional positioning and over-travel of each axis	0

[Data type] Real number axis type

[Data unit] mm

[Data scope] -1000~1000

[Validity method] Effective Immediately

1931	Minimum angle of indexing table	0

[Data type] Real number

[Data unit] deg

[Data scope] 0~360.000

[Validity method] Effective Immediately

1932	Setting of indexing axis of indexing table	0

[Data type] Integer

[Data scope] 0~8

[Validity method] Reset valid

1	2	3	4	5	6	7	8
X	Y	Z	4th	5th	6th	7th	8th

	7#	6#	5#	4#	3#	2#	1#	0#
1940	SKF							SEB

[Data type] Bit type

[Data scope] 0 or 1

[Factory Default] 0 0 0 0 0 0 0 0

[Validity method] Effective Immediately

SEB: G31/G37 read position

0: When signal moves

1: When signal is triggered

SKF: Whether dry run and rate are valid for G31 jump command

0: Invalid

1:Valid

	7#	6#	5#	4#	3#	2#	1#	0#
1950	MOU						JOG	MIN

[Data type] Bit type

[Data scope] 0 or 1

[Factory Default] 0 0 0 0 0 0 0 0

[Validity method] Effective Immediately

MIN: Manual intervention and return function

0: Invalid

1:Valid

JOG: Manual absolute value switch function

0: Valid

1: Invalid

MOU: Whether M, S, T and B codes are output when the program is restarted

0: Do not output

1: Output

1960	The movement sequence of the axes when the program is restarted or manual intervention works	1, 1, 3, 2, 2

[Data type] Integer axis type

[Data scope] 1- Number of control axes

[Validity method] Effective Immediately

	7#	6#	5#	4#	3#	2#	1#	0#
1971	ESC	ESR						

[Data type] Bit type

[Data scope] 0 or 1

[Factory Default] 0 0 0 0 0 0 0 0

[Validity method] Effective Immediately

ESR: External program number retrieval

0: Invalid

1:Valid

ESC: After entering ESTB and before starting retrieval, input reset

0: Retrieve

1: Do not retrieve

	7#	6#	5#	4#	3#	2#	1#	0#
1972								DBUF

[Data type] Bit type

[Data scope] 0 or 1

[Factory Default] 0 0 0 0 0 0 0 0

[Validity method] Effective Immediately

DBUF: Macro variable for correcting tool deviation workpiece in interpolation pre-read

0: Invalid

1:Valid

4.8 Fixed cycle parameter (2000~2099)

	7#	6#	5#	4#	3#	2#	1#	0#
2000	PCP	G84	RD2	RD1	EXC	M5T		FXY

[Data type] Bit type

[Data scope] 0 or 1

[Factory Default] 0 0 0 0 0 0 0 0

[Validity method] Effective Immediately

FXY: Axis for drilling fixed cycle boreholes

0: Axis Z

1: Program selection axis

M5T: When the spindle at the bottom of the tapping circulation hole rotates

0: Do not output M05

1: Output M05

EXC: G81 meaning

0: adopting fixed loop command

1: External motion of command

RD2, RD1: Set the axis retracting direction of G76 or G87

RD2	RD1	G17	G18	G19
0	0	+X	+Z	+Y

0	1	-X	-Z	-Y
1	0	+Y	+X	+Z
1	1	-Y	-X	-Z

G84: Rigid tapping command method

0: Use M29 to command rigid tapping

1: Not used

PCP: Rigid tapping

0: Use high speed deep hole tapping

1: Not use high speed deep hole tapping

2010	The tool retracting amount d of high-speed deep hole circulation G73	2

[Data type] Real number

[Data unit] mm

[Data scope] 0~100

[Validity method] Effective Immediately

2011	The space reserved d for fixed cycle G83	2

[Data type] Real number

[Data unit] mm

[Data scope] 0~100

[Validity method] Effective Immediately

2034	The space reserved during the drilling cycle for small-diameter deep hole	2

[Data type] Real number

[Data unit] mm

[Data scope] 0~100

[Validity method] Effective Immediately

4.9 Rigid tapping parameter (2100~2299)

2105	Setting of rigid tapping synchronous error width	3000

[Data type] Integer

[Data unit] Detection unit

[Data scope] 0~999999

[Validity method] Effective Immediately

2106	In-place width of tapping shaft in rigid tapping	100

[Data type] Integer

[Data unit] Detection unit

[Data scope] 0~32767

[Validity method] Effective Immediately

2107	In-place width of spindle in rigid tapping	100

[Data type] Integer

[Data unit] Detection unit

[Data scope] 0~32767

[Validity method] Effective Immediately

2112	Retracting amount or space reserved during tapping cycle	2

[Data type] Real number

[Data unit] mm

[Data scope] 0~100

[Validity method] Effective Immediately

2113	Default time when P is not assigned during tapping cycle	100

[Data type] Integer

[Data unit] ms

[Data scope] 0~1000

[Validity method] Effective Immediately

Note

1. This parameter is valid only in G74, G84, G88.
2. This parameter also refers to: The pause time for reverse rotation of the spindle when G74, G84 performs cutting and retracting.

2120	Limit value of position deviation in the movement of tapping shaft in rigid tapping	120000

[Data type] Integer

[Data unit] Detection unit

[Data scope] 0~999999

[Validity method] Effective Immediately

2121	Limit value of position deviation in the movement of spindle during rigid tapping/Cs and spindle positioning	120000

[Data type] Integer

[Data unit] Detection unit

[Data scope] 0~999999

[Validity method] Effective Immediately

2122	Limit value of position deviation in the stop of tapping shaft in rigid tapping	6000

[Data type] Integer

[Data unit] Detection unit

[Data scope] 0~32767

[Validity method] Effective Immediately

2123	Limit value of position deviation in the stop of spindle during rigid tapping/Cs and spindle positioning	6000

[Data type] Integer

[Data unit] Detection unit

[Data scope] 0~32767

[Validity method] Effective Immediately

2140	Maximum speed of spindle during rigid tapping (1st gear)	6000

[Data type] Integer

[Data unit] rpm

[Data scope] 0~9999

[Validity method] Reset valid

2141	Maximum speed of spindle during rigid tapping (2nd gear)	6000

[Data type] Integer

[Data unit] rpm

[Data scope] 0~9999

[Validity method] Reset valid

2142	Maximum speed of spindle during rigid tapping (3rd gear)	6000

[Data type] Integer

[Data unit] rpm

[Data scope] 0~9999

[Validity method] Reset valid

2143	Maximum speed of spindle during rigid tapping (4th gear)	6000

[Data type] Integer

[Data unit] rpm

[Data scope] 0~9999

[Validity method] Reset valid

2170	Position control loop gain of rigid tapping spindle and tapping axis (1st gear)	350

[Data type] Integer

[Data unit] 0.01/s

[Data scope] 0~9999

[Validity method] Effective Immediately

2171	Position control loop gain of rigid tapping spindle and tapping axis (2nd gear)	350

[Data type] integer

[Data unit] 0.01/s

[Data scope] 0~9999

[Validity method] Effective Immediately

2172	Position control loop gain of rigid tapping spindle and tapping axis (3rd gear)	350

[Data type] Integer

[Data unit] 0.01/s

[Data scope] 0~9999

[Validity method] Effective Immediately

2173	Position control loop gain of rigid tapping spindle and tapping axis (4th gear)	350

[Data type] Integer

[Data unit] 0.01/s

[Data scope] 0~9999

[Validity method] Effective Immediately

2180	Gain coefficient of spindle loop during rigid tapping (1st gear)	320

[Data type] Integer

[Data scope] 0~32767

[Validity method] Effective Immediately

2181	Gain coefficient of spindle loop during rigid tapping (2nd gear)	320

[Data type] Integer

[Data scope] 0~32767

[Validity method] Effective Immediately

2182	Gain coefficient of spindle loop during rigid tapping (3rd gear)	320

[Data type] Integer

[Data scope] 0~32767

[Validity method] Effective Immediately

2183	Gain coefficient of spindle loop during rigid tapping (4th gear)	320

[Data type] Integer

[Data scope] 0~32767

[Validity method] Effective Immediately

2210	Reverse gap of rigid tapping spindle (1st gear)	0

[Data type] Integer

[Data unit] Detection unit

[Data scope] 1~127

[Validity method] Reset valid

2211	Reverse gap of rigid tapping spindle (2nd gear)	0

[Data type] Integer

[Data unit] Detection unit

[Data scope] 1~127

[Validity method] Reset valid

2212	Reverse gap of rigid tapping spindle (3rd gear)	0

[Data type] Integer

[Data unit] Detection unit

[Data scope] 1~127

[Validity method] Reset valid

2213	Reverse gap of rigid tapping spindle (4th gear)	0

[Data type] Integer

[Data unit] Detection unit

[Data scope] 1~127

[Validity method] Reset valid

4.10 Input and output parameters (2400~2599)

	7#	6#	5#	4#	3#	2#	1#	
2401	LIM	MEL	SKL	DEC	SWI		HIO	

[Data type] Bit type

[Data scope] 0 or 1

[Factory Default] 0 0 0 0 0 0 0 0

[Validity method] Reset valid

HIO: High speed IO signal function

0: Invalid

1:Valid

SWI: valid signs of position switch

0: Invalid

1:Valid

DEC: Homing deceleration signal

0: Decelerate at 0

1: Decelerate at 1

SKL: Jump signal

0: Valid when it is 0

1: Valid when it is 1

MEL: Measurement signal

0: Valid when it is 0

1: Valid when it is 1

LTM: Hard limit machining method

0: Hard limit deceleration machining

1: Stop now

	7#	6#	5#	4#	3#	2#	1#	0#
2402	MHI		EOPF	EEMG				RLK

[Data type] Bit type

[Data scope] 0 or 1

[Factory Default] 0 0 0 0 0 0 0 0

[Validity method] Reset valid

RLK: Start interlocking

0: Invalid

1:Valid

EEMG: High speed external emergency stop machining

0: Invalid

1:Valid

EOPF: High speed external operation completion machining

0: Invalid

1:Valid

MHI: High speed MST function

0: Invalid

1:Valid

2410	Delay time of strobing signals MF, SF, TF, BF	32

[Data type] Integer

[Data unit] ms

[Data scope] 16~32767

[Validity method] Effective Immediately

2411	Receivable width of completion signal of M, S, T, B signal	32

[Data type] Integer

[Data unit] ms

[Data scope] 16~32767

[Validity method] Effective Immediately

2412	X address assigned to the jump signal PLC	0

[Data type] Integer

[Data scope] 0~127 is invalid when the parameter is less than 10.

[Validity method] Effective Immediately

2413	X address assigned to measure arrival and external high-speed signal PLC	0

[Data type] Integer

[Data scope] 0~127 is invalid when the parameter is less than 10.

[Validity method] Effective Immediately

2418	Output time of reset signal	600

[Data type] Integer

[Data unit] ms

[Data scope] 0~1000

[Validity method] Effective Immediately

2420	Address sequence number corresponding to the first I/O	0
2421	Address sequence number corresponding to the second I/O	0
2422	Address sequence number corresponding to the third I/O	0
2423	Address sequence number corresponding to the fourth I/O	0

[Data type] Integer

[Data unit]

[Data scope] 0~12

[Validity method] Effective Immediately

0: I/O endpoint addresses are arranged in physical link order

1 - 12: I/O endpoint addresses are assigned according to the assigned address sequence number. When the valid I/O is between 1 and 12, the method for allocating I/O is valid, and the base address corresponding to each I/O can be based on diagnostic parameters 80 - 87.

	7#	6#	5#	4#	3#	2#	1#	0#
2430								EMS

[Data type] Bit type

[Data scope] 0 or 1

[Factory Default] 0 0 0 0 0 0 0 0

[Validity method] Effective Immediately

EMS: Extend external mechanical origin offset function

0: Invalid

1:Valid

2431	Extend the signal start address used in the external mechanical origin offset function	0

[Data type] Integer

[Data scope] 0~1844

[Validity method] Effective Immediately

2500-2531	Servo axis corresponding to position switch	0

[Data type] Integer

[Data scope] 0~8

[Validity method] Effective Immediately

Note
Position switch function is valid when position SWI is 1.
This position switch is invalid when it is 0.

2532-2563	Forward maximum range of position switch	0

[Data type] Real number

[Data scope] -999999.9999~999999.9999

[Validity method] Effective Immediately

2564-2595	Reverse maximum range of position switch	0

[Data type] Real number

[Data scope] -999999.9999 ~ 999999.9999

[Validity method] Effective Immediately

4.11 Tool management parameter (2600~2799)

	7#	6#	5#	4#	3#	2#	1#	0#
2600	TONF				TPRI	TMLU	TLB	SUB

[Data type] Bit type

[Data scope] 0 or 1

[Factory Default] 0 0 0 0 0 0 0 1

[Validity method] Effective Immediately

SUB: Tool lifting form of tool radius compensation

0: Type A

1: Type B

TLB: Select the type of tool length compensation

0: Mode A (always Axis Z, regardless of plane selection)

1: Mode B (axis perpendicular to the assigned plane)

TMLU: Tool management life unit

0: Minute

1: Number of times

TPRI: Tool priority

0: Sequence

1: Maximum

TONF: Tool management display switch

0: Off

1: On

	7#	6#	5#	4#	3#	2#	1#	0#
2601	ODI	LVK				CCN		

[Data type] Bit type

[Data scope] 0 or 1

[Factory Default] 1 0 0 0 0 1 0 0

[Validity method] Effective Immediately

CCN: Radius compensation G28 to midpoint

0: Cancel compensation

1: Cancel until reference point

LVK: When the tool length offset is reset

0: Do not clear

1: Clear

ODI: Setting of tool radius compensation

0: Diameter value

1: Radius value

	7#	6#	5#	4#	3#	2#	1#	0#
2602						TPH	CNI	OIM

[Data type] Bit type

[Data scope] 0 or 1

[Factory Default] 0 0 0 0 0 0 0 0

[Validity method] Effective Immediately

OIM: Whether the metric-imperial conversion is performed for machine coordinate

0: No conversion

1: Conversion

CNI: Radius compensation in progress

0: Perform interference check

1: Do not perform interference check

TPH: Offset number address of tool offset G45-G48

0: H code

1: D code

	7#	6#	5#	4#	3#	2#	1#	0#
2603	T7V	T8V	T9V	T10V	T4H	T5H	T6H	OLDT

[Data type] Bit type

[Data scope] 0 or 1

[Factory Default] 0 0 0 0 0 0 0 0

[Validity method] Effective Immediately

OLDT: Load old tool offset

Load in 0 jumping to 1

T4H	T5H	T6H	Description
1	0	0	Offset value displays 4 columns
0	1	0	Offset value displays 5 columns
0	0	1	Offset value displays 6 columns

T7V	T8V	T9V	T10V	Description
1	0	0	0	Offset value displays 7 lines
0	1	0	0	Offset value displays 8 lines
0	0	1	0	Offset value displays 9 lines
0	0	0	1	Offset value displays 10 lines

2610	The vector limit value is ignored in tool radius compensation when it is moving along the outside of the corner	0.01

[Data type] Real number

[Data unit] mm

[Data scope] 0~100

[Validity method] Effective Immediately

2611	Maximum value of tool wear compensation	60

[Data type] Real number

[Data unit] mm

[Data scope] 0~100

[Validity method] Effective Immediately

2612	Number of read-in program blocks in tool radius compensation mode	8

[Data type] Real number

[Data unit] Block

[Data scope] 0~100

[Validity method] Effective Immediately

2651	Automatic tool length compensation measurement speed	1000

[Data type] Real number

[Data unit] mm/min

[Data scope] 0~15000

[Validity method] Effective Immediately

2652	r value of automatic tool length compensation measurement	0

[Data type] Real number

[Data scope] 0~10000

[Validity method] Effective Immediately

2653	e value of automatic tool length compensation	0

[Data type] Real number

[Data scope] 0~10000

[Validity method] Effective Immediately

4.12 Pitch compensation parameter (2800~2999)

	7#	6#	5#	4#	3#	2#	1#	0#
2800							WDIR	SCRW

[Data type] Axis type

[Data scope] 0 or 1

[Factory Default] 0 0 0 0 0 0 0 1

[Validity method] Reset valid

SCRW: Pitch compensation

0: Do not conduct

1: Conduct

WDIR: Pitch compensation selection

0: Unidirectional

1: Bidirectional (reverse gap compensation #4121 will fail and be replaced by # 2806 when bidirectional pitch compensation is turned on)

2806	Pitch error compensation value homing	0

[Data type] Integer axis type

[Data unit] Detection unit

[Data scope] -32768 ~ 32767

[Validity method] Reset valid

If the setting direction of homing (parameter ZMI (# 1004.5) is forward, the absolute value of the pitch error compensation at the reference point when homing from the reverse direction; or if the setting direction of homing is reverse, the absolute value of the pitch error compensation at the reference point when homing from the forward direction. That is the reverse gap value at the reference point. It is valid in bidirectional pitch compensation.

2810	Pitch error compensation number for each axis reference point	0

[Data type] Integer axis type

[Data scope] 0~1023

[Validity method] Reset valid

2811	Number of thread pitch error compensation point at the far end in negative direction of each axis	0

[Data type] Integer axis type

[Data scope] 0~1023

[Validity method] Reset valid

2812	Number of pitch error compensation point at the far end in the positive direction of each axis	0

[Data type] Integer axis type

[Data scope] 0~1023

[Validity method] Reset valid

> Note
> The set value of this parameter is greater than that of #2810 (reference point pitch compensation number).

2813	Pitch error compensation rate of each axis	1

[Data type] Real number axis type

[Data unit] Times

[Data scope] 1~100

[Validity method] Reset valid

2814	Spacing between pitch error compensation points for each axis	0

[Data type] Real number axis type

[Data unit] mm

[Data scope] 0~999999.9999

[Validity method] Reset valid

> Note
> The pitch error compensation points are equally spaced, minimum spacing = maximum feed speed* (interpolation period/60000) * compensation rate.

4.13 Turning cycle parameter (3000~3199)

	7#	6#	5#	4#	3#	2#	1#	0#
3000	GSC	GSB						GMT

[Data type] Bit type

[Data scope] 0 or 1

[Factory Default] 0 0 0 0 0 0 0 0

[Validity method] Restart valid

GMT: System in power-on

0: machining center

1: lathe

GSB: Lathe G code B series

0: Invalid

1:Valid

GSC: Lathe G code C series

0: Invalid

1:Valid

	7#	6#	5#	4#	3#	2#	1#	0#
3001	RTV				DIA			

[Data type] Bit type

[Data scope] 0 or 1

[Factory Default] 0 0 0 0 0 0 0 0

[Validity method] Reset valid

DIA: Command value of Axis X in the program is input based on

0: Diameter

1: Radius

RTV: Rate during retreating of threading tool

0: Valid

1: Invalid

	7#	6#	5#	4#	3#	2#	1#	0#
3101	G75	M5T		MACT		RTR		RAB

[Data Type] bit-type

[Data scope] 0 or 1

[Factory Default] 0 0 0 0 0 0 0 0

[Validity method] Effective Immediately

RAB: Point R in drilling cycle

0: Incremental value specification

1: Absolute value specification

RTR: Drilling cycle type

0: Not high-speed deep hole

1: High speed deep hole

MACT: Select the function of G71-G74

0: Multiple cycles of lathe

1: Grinding cycle of grinding machine

G75: G75 tool grinder

0: Straight tool

1: Oblique tool

3111	Suspension time of drilling cycle (G83, G87)	0.5000

[Data type] Real number axis type

[Data unit] Seconds

[Data scope] 0~9999

[Validity method] Effective Immediately

	7#	6#	5#	4#	3#	2#	1#	0#
3112	M_T	R_T	U_PQ	TYP	R TP	RTR		

[Data Type] bit-type

[Data scope] 0 or 1

[Factory Default] 0 0 0 0 0 0 0 0

[Validity method] Effective Immediately

RTR: Drilling cycle type

0: Non-deep hole drilling

1: Deep hole drilling

R TP: Tool retracting method for G71/G72 machining type I

0: Normal

1: Efficient

TYP: Type of G71/G72 machining track

0: Type I

1: Type II

U_PQ: The unit used when G74/G75 commands P/Q

0: 0.001mm

1: 1mm

R_T: Returning mode of G74/G75

0: Tool retracting on the first layer not 0

1: Tool retracting on the first layer 0

M_T: G74/G75 fast/feed tool retracting

0: Fast tool retracting

1: Feed tool retracting

3114	Borehole Cycle (G83, G87) Return Distance	0.0000

[Data type] Real number

[Data unit] mm

[Data scope] -999999.9999~999999.9999

[Validity method] Effective Immediately

3130	Chamfering amount of thread cutting cycle (G76, G92) (0.1* pitch)	0

[Data type] Integer

[Data unit] 0.1 times

[Data scope] 0~99

[Validity method] Effective Immediately

3132	Cut-in amount of rough turning cycle (G71, G72)	0.001

[Data type] Real number

[Data unit] mm

[Data scope] 0.001~99999.999

[Validity method] Effective Immediately

3133	Tool retracting amount of rough turning cycle (G71, G72)	0.0001

[Data type] Real number

[Data unit] mm

[Data scope] 0.0001~99999.999

[Validity method] Effective Immediately

3135	Axis X tool retracting amount of closed cutting cycle (G73)	0

[Data type] Real number

[Data unit] mm

[Data scope] -999999.9999~999999.9999

[Validity method] Effective Immediately

3136	Axis Z tool retracting amount of closed cutting cycle (G73)	0

[Data type] Real number

[Data unit] mm

[Data scope] -999999.9999~999999.9999

[Validity method] Effective Immediately

3137	Number of segments of closed cutting cycle (G73)	1

[Data type] Integer

[Data unit] Times

[Data scope] 1~999999

[Validity method] Effective Immediately

3139	Retracting amount of multiple cycles (G74, G75)	0

[Data type] Real number

[Data unit] mm

[Data scope] 0~99999.999

[Validity method] Effective Immediately

3140	Minimum cut-in amount of multiple-thread cutting cycle G76 (0.001 mm)	0

[Data type] Integer

[Data unit] 0.001mm

[Data scope] 0~99999

[Validity method] Effective Immediately

3141	Fine machining allowance of multiple-thread cutting cycle G76 (0.001 mm)	0

[Data type] Integer

[Data unit] 0.001mm

[Data scope] 0~99999

[Validity method] Effective Immediately

3142	Times of fine machining cycle of multiple-thread cutting cycle G76	1

[Data type] Integer

[Data unit] Times

[Data scope] 1~99

[Validity method] Effective Immediately

3143	Tool tip angle of multiple-thread cutting cycle G76 (deg)	0

[Data type] Integer

[Data unit] deg

[Data scope] 0~99

[Validity method] Effective Immediately

3144	Switch to the M code for the machining center	0

[Data type] Integer

[Data scope] 100~999

[Validity method] Reset valid

3145	Switch to the M code for the lathe	0

[Data type] Integer

[Data scope] 100~999

[Validity method] Reset valid

3146	Number of decoding forward-looking blocks (used for internal testing)	0

[Data type] Integer

[Data scope] 0~999

[Validity method] Reset valid

3147	Linear axis of polar coordinate interpolation	1

[Data type] Integer

[Data scope] 1~3

[Validity method] Reset valid

The plane performing the polar coordinate interpolation is determined by the linear axis parameter (#3147) performing the polar coordinate interpolation.

Set value of #3147	Plane
1	G17 (XY plane)
2	G19 (YZ plane)
3	G18 (ZX plane)

3148	Rotating axis of polar coordinate interpolation	4

[Data type] Integer

[Data scope] 4 ~ Number of axes set by the system

[Validity method] Reset valid

4: Axis 4

5: Axis 5

⋮ ⋮

3149	Maximum cutting feed rate for polar coordinate interpolation	0

[Data type] Real

[Data scope] 0~99999.999

[Validity method] Effective Immediately

3160	Decoding and interpolation wait for M code synchronously	0

[Data type] Real

[Data scope] 0~99999.999

[Validity method] Effective Immediately

4.14 Servo parameter (4000~4999)

	7#	6#	5#	4#	3#	2#	1#	0#
4000	RTYP	PVCT			SDID			IGN

[Data type] Bit type

[Data scope] 0 or 1

[Factory Default] 0 0 0 0 0 0 0 0

[Validity method] Effective Immediately

IGN: Servo axis ignored

0: Do not ignore

1: Ignore

SDID: Servo subdivision function

0: Invalid

1:Valid

PVCT: Setting of position where the position loop control is located

0: System

1: Servo

RTYP: Raster type

0: Increment

1: Absolute

	7#	6#	5#	4#	3#	2#	1#	0#
4001	RAST	RDIR	DPOS		APZ	SMPR		LVP

[Data type] Axis type

[Data scope] 0 or 1

[Factory Default] 0 0 0 0 1 0 0 0

[Validity method] Effective Immediately

LVP: Recover system default servo parameters

0: Do not recover

1: Recover

Note: The system reads the servomotor default parameters via the driver when the LVP is set from "0" to "1".

SMPR: In case of straight-line control, multi-turn exceeding servo value shall be processed according to the cycle

0: Invalid

1:Valid

APZ: Machine zero setting

0: Inconsistent

1: Consistent

Note When the absolute encoder is used, it shall be set to "0" in the first power-on commissioning of the system or zero is lost. The system will automatically set APZ from "0" to "1" or manually move the axis to the position where zero is to be set after the manual homing is completed. When the APZ is set from "0" to "1", the manual zero setting is performed, and the absolute encoder zero is consistent with the machine zero.

DPOS: Dual position loop control

0: Invalid

1:Valid

RDIR: Grating scale direction

0: Forward

1: Reverse

RAST: Raster closed loop function

0: No

1: Yes

	7#	6#	5#	4#	3#	2#	1#	0#
4003	SISB	FDIR	CDIR	INCW				SAST

[Data type] Bit type

[Data scope] 0 or 1

[Factory Default] 0 0 0 0 0 0 0 0

[Validity method] Effective Immediately

SAST: Servo in-place stop adjustment function

0: Invalid

1:Valid

INCW: Incremental raster homing mode

0: Motor coded disc homing

1: Incremental raster homing

CDIR: Servo command direction

0: Forward

1: Reverse

FDIR: Servo feedback direction

0: Forward

1: Reverse

SISB: System detection accuracy setting

0: 0.1u

1: 1u

4009	Servo position proportion increase	245

[Data type] Integer axis type

[Data unit] Circle

[Data scope] 1~999999

[Validity method] Effective Immediately

4013	Position loop gain percentage when servo stops	0

[Data type] Integer axis type

[Data unit] %

[Data scope] 0~200

[Validity method] Effective Immediately

4014	Position feedforward gain	0

[Data type] Integer axis type

[Data unit] %

[Data scope] 0~100

[Validity method] Effective Immediately

4015	Position feedforward low-pass termination rate (HZ)	300

[Data type] Integer axis type

[Data unit] %

[Data scope] 0~2000

[Validity method] Effective Immediately

4016	First delay time constant of dual position loop	300

[Data type] Integer axis type

[Data unit] ms

[Data scope] 0~1000

[Validity method] Effective Immediately

4017	Numerator of electronic gear ratio	8192

[Data type] Integer axis type

[Data scope] 1~999999

[Validity method] Effective Immediately

4018	Denominator of electronic gear ratio	5000

[Data type] Integer axis type

[Data scope] 1~999999

[Validity method] Effective Immediately

4018	Position that Incremental raster enters virtual speed reducing block (mm)	0

[Data type] Real number axis type

[Data unit] mm

[Data scope] 0~1000

[Validity method] Effective Immediately

4019	Incremental raster virtual speed reducing block length (mm)	0

[Data type] Real number axis type

[Data unit] mm

[Data scope] 0~1000

[Validity method] Effective Immediately

	7#	6#	5#	4#	3#	2#	1#	0#
4020					SPW		ADJ	SYN

[Data type] Bit type

[Data scope] 0 or 1

[Factory Default] 0 0 0 0 0 0 0 0

[Validity method] Reset valid

SYN: Effective sign for synchronization of the feed axis

0: Invalid

1:Valid

ADJ: Modification form for synchronization of the feed axis

0: Not correct

1: Correct

SPW: Detection amount of machine coordinate synchronization error considering starting position deviation

0: No

1: Yes

4021	Number of the main control axis	0

[Data type] Integer axis type

[Data scope] 0~6

[Validity method] Reset valid

4022	Allowable synchronization error of the coordinates of the machine	0

[Data type] Integer axis type

[Data unit] 0.1um

[Data scope] 0~999999

[Validity method] Effective Immediately

4023	Allowable synchronization error of position deviation	0

[Data type] Integer axis type

[Data unit] 0.1um

[Data scope] 0~999999

[Validity method] Effective Immediately

4024	Allowable compensation of synchronous adjustment	0

[Data type] Integer axis type

[Data unit] 0.1um

[Data scope] 0~999999

[Validity method] Effective Immediately

4025	Allowable deviation of synchronous torque	0

[Data type] Integer axis type

[Data unit] 10uA

[Data scope] 0~999999

[Validity method] Effective Immediately

4100	Pulse equivalent per axis (failed)	1000

[Data type] Real number axis type

[Data scope] 1~999999

[Validity method] Reset valid

4110	In-place width of each axis	100

[Data type] Integer axis type

[Data unit] 0.1um

[Data scope] 1~32767

[Validity method] Effective Immediately

4111	Maximum allowable position deviation when each axis stops	1000

[Data type] Integer axis type

[Data unit] 0.1um

[Data scope] 0~32767

[Validity method] Effective Immediately

4112	Maximum allowable position deviation when each axis moves	120000

[Data type] Integer axis type

[Data unit] 0.1um

[Data scope] 0~999999

[Validity method] Effective Immediately

4114	Raster signal cycle length (0.1 um)	0

[Data type] Integer axis type

[Data unit] 0.1um

[Data scope] 0~1000

[Validity method] Effective Immediately

4115	Allowable coordinate difference between raster scale and servo encoder (0.1 um)	1000

[Data type] Integer axis type

[Data unit] 0.1um

[Data scope] 0~999999

[Validity method] Effective Immediately

> Note
> Coordinate difference detection is not performed when it is set to 0.
> It is recommended to set the default value detection function in the commissioning of raster scale-based machine and running to achieve protection in abnormality.

4116	First delay time constant of dual position loop (ms)	0

[Data type] Integer axis type

[Data unit]

[Data scope] 0~1000

[Validity method] Effective Immediately

4118	Position that Incremental raster enters virtual speed reducing block (mm)	0

[Data type] Integer axis type

[Data unit]

[Data scope] -10000~10000

[Validity method] Effective Immediately

4119	Length that incremental raster enters virtual speed reducing block (mm)	0

[Data type] Integer axis type

[Data unit]

[Data scope] 0~1000

[Validity method] Effective Immediately

4120	Grid offset of each axis	0

[Data type] Real number axis type

[Data unit] mm

[Data scope] 0~10000

[Validity method] Reset valid

4121	Reverse gap compensation of each axis	0

[Data type] Real number axis type

[Data unit] mm

[Data scope] -9.9999~9.9999

[Validity method] Reset valid

4122	Reverse gap compensation for fast-moving of each axis	0

[Data type] Real number axis type

[Data unit] mm

[Data scope] -9.9999~9.9999

[Validity method] Reset valid

4123	Distance of reverse gap compensation	0.01

[Data type] Real number axis type

[Data unit] mm

[Data scope] 0~9999

[Validity method] Reset valid

The following 4200 to 4455 default parameters vary according to the motor model, as detailed in the Appendix. Adaptive to GR2000 series servo drivers.

4200	Parameter change password	315

[Data type] Integer axis type

[Data scope] 0~9999

[Validity method] Effective Immediately

4201	Motor model code	65

[Data type] Integer axis type

[Data scope] 0~1329

[Validity method] Effective Immediately

4202	Selection of motor type	0

[Data type] Integer axis type

[Data scope] 0 or 1

[Validity method] Effective Immediately

4203	Power-on initial monitoring setting	0

[Data type] Integer axis type

[Data scope] 0~21

[Validity method] Effective Immediately

4204	Selection of operating mode	21

[Data type] Integer axis type

[Data scope] 9~25

[Validity method] Effective Immediately

4205	Reserve	

[Data type] Integer axis type

[Data unit]

[Data scope]

[Validity method]

4206	Reserve	

[Data type] Integer axis type

[Data unit]

[Data scope]

[Validity method]

4207	Reserve	

[Data type] Integer axis type

[Data unit]

[Data scope]

[Validity method]

4208	Reserve	

[Data type] Integer axis type

[Data unit]

[Data scope]

[Validity method]

4209	Reserve	

[Data type] Integer axis type

[Data unit]

[Data scope]

[Validity method]

4210	Reserve	

[Data type] Integer axis type

[Data unit]

[Data scope]

[Validity method]

4211	Reserve	

[Data type] Integer axis type

[Data unit]

[Data scope]

[Validity method]

4212	Reserve	

[Data type] Integer axis type

[Data scope]

[Validity method]

4213	Reserve	

[Data type] Integer axis type

[Data scope]

[Validity method]

4214	Reserve	0

[Data type] Integer axis type

[Data scope]

[Validity method]

4215	First proportional gain of speed loop	200

[Data type] Integer axis type

[Data unit] Hz

[Data scope] 10~3000

[Validity method] Effective Immediately

4216	First integral time constant of speed loop	100

[Data type] Integer axis type

[Data scope] 1~3000

[Validity method] Effective Immediately

4217	Current command filter coefficient	800

[Data type] Integer axis type

[Data scope] 10~5000

[Validity method] Effective Immediately

4218	Speed feedback detection filter coefficient	800

[Data type] Integer axis type

[Data scope] 10~5000

[Validity method] Effective Immediately

4219	First proportional gain of position loop	40

[Data type] Integer axis type

[Data unit]

[Data scope] 10~1000

[Validity method] Effective Immediately

4220	Reserve	0

[Data type] Integer axis type

[Data scope]

[Validity method]

4221	Reserve	

[Data type] Integer axis type

[Data unit] rpm

[Data scope] -6000~6000

[Validity method] Effective Immediately

4222	Reserve	0

[Data type] Integer axis type

[Data scope]

[Validity method]

4223	Reserve	

[Data type] Integer axis type

[Data unit]

[Data scope]

[Validity method]

4224	Reserve	

[Data type] Integer axis type

[Data unit]

[Data scope]

[Validity method]

4225	Position feedforward gain	0

[Data type] Integer axis type

[Data unit] %

[Data scope] 0~100

[Validity method] Effective Immediately

4226	Position feedforward low-pass filter coefficient	2000

[Data type] Integer axis type

[Data unit] Hz

[Data scope] 10~5000

[Validity method] Effective Immediately

4227	Reserve	

[Data type] Integer axis type

[Data unit]

[Data scope]

[Validity method]

4228	Position command direction invert	

[Data type] Integer axis type

[Data scope] 0 or 1

[Validity method] Effective Immediately

4229	Numerator of position command electronic gear ratio	1

[Data type] Integer axis type

[Data unit]

[Data scope] 1~32767

[Validity method] Effective Immediately

4230	Position command pulse division coefficient	1

[Data type] Integer axis type

[Data scope] 1~32767

[Validity method] Effective Immediately

4231	Position arrival scope	20

[Data type] Integer axis type

[Data unit] plus

[Data scope] 0~30000

[Validity method] Effective Immediately

4232	Position out-of-tolerance scope	400

[Data type] Integer axis type

[Data unit] 100plus

[Data scope] 0~4

[Validity method] Effective Immediately

4233	Reserve	0

[Data type]

[Data unit]

[Data scope]

[Validity method]

4234	Position output signal invert	0

[Data type] Integer axis type

[Data scope] 0~1

[Validity method] Effective Immediately

4235	Reserve	0

[Data type]

[Data unit]

[Data scope]

[Validity method]

4237	Number of position feedback output pulses	10000

[Data type] Integer axis type

[Data unit] plus

[Data scope] 1024~30000

[Validity method] Effective Immediately

4239	Reserve	0

[Data type]

[Data scope]

[Validity method]

4240	Reserve	0

[Data type]

[Data scope]

[Validity method]

4241	Reserve	0

[Data type]

[Data unit]

[Data scope]

[Validity method]

4242	Reserve	

[Data type]

[Data unit]

[Data scope]

[Validity method]

4243	Reserve	0

[Data type]

[Data scope]

[Validity method]

4244	Reserve	0

[Data type]

[Data unit]

[Data scope]

[Validity method]

4245	Second proportional gain of speed loop	400

[Data type] Integer axis type

[Data unit] Hz

[Data scope] 10~3000

[Validity method] Effective Immediately

4246	Second integral time constant of speed loop	100

[Data type] Integer axis type

[Data scope] 1~3000

[Validity method] Effective Immediately

4248	Third proportional gain of speed loop	400

[Data type] Integer axis type

[Data unit] Hz

[Data scope] 10~3000

[Validity method] Effective Immediately

4249	Third integral time constant of speed loop	100

[Data type] Integer axis type

[Data scope] 1~3000

[Validity method] Effective Immediately

4250	Reserve	0

[Data type]

[Data unit]

[Data scope]

[Validity method]

4251	Speed command forward and reverse invert	0

[Data type] Integer axis type

[Data scope] 0 or 1

[Validity method] Effective Immediately

4252	Reserve	

[Data type]

[Data unit]

[Data scope]

[Validity method]

4253	Reserve	

[Data type]

[Data unit]

[Data scope]

[Validity method]

4254	Maximum speed limit of speed command	2500

[Data type] Integer axis type

[Data unit] rpm

[Data scope] 1~30000

[Validity method] Effective Immediately

4255	Reserve	

[Data type]

[Data unit]

[Data scope]

[Validity method]

4256	Reserve	

[Data type]

[Data scope]

[Validity method]

4257	Speed command feedforward gain	0

[Data type] Integer axis type

[Data unit] ms

[Data scope] 0~30000

[Validity method] Effective Immediately

4258	Linear acceleration time constant	0

[Data type] Integer axis type

[Data unit] ms

[Data scope] 0~10000

[Validity method] Effective Immediately

4259	Linear acceleration deceleration time	0

[Data type] Integer axis type

[Data unit] ms

[Data scope] 1~4

[Validity method] Effective Immediately

4260	Reserve	0

[Data type] Integer axis type

[Data unit]

[Data scope]

[Validity method]

4261	Valid scope of speed arrival	5

[Data type] Integer axis type

[Data unit] %

[Data scope] 1~100

[Validity method] Effective Immediately

4262	Valid scope of zero speed output	5

[Data type] Integer axis type

[Data unit] %

[Data scope] 0~100

[Validity method] Effective Immediately

4263	Analog command multiplication coefficient	1

[Data type] Integer axis type

[Data unit]

[Data scope] 1~1024

[Validity method] Effective Immediately

4264	Analog command division coefficient	1

[Data type] Integer axis type

[Data unit]

[Data scope] 1~1024

[Validity method] Effective Immediately

4265	Reserve	

[Data type] Integer axis type

[Data unit]

[Data scope]

[Validity method]

4266	Reserve	

[Data type] Integer axis type

[Data unit]

[Data scope]

[Validity method]

4267	Reserve	

[Data type] Integer axis type

[Data unit]

[Data scope]

[Validity method]

4268	Reserve	

[Data type] Integer axis type

[Data unit]

[Data scope]

[Validity method]

4269	Reserve	

[Data type] Integer axis type

[Data unit]

[Data scope]

[Validity method]

4270	Reserve	

[Data type] Integer axis type

[Data unit]

[Data scope]

[Validity method]

4271	Reserve	

[Data type] Integer axis type

[Data unit]

[Data scope]

[Validity method]

4272	Reserve	

[Data type] Integer axis type

[Data unit]

[Data scope]

[Validity method]

4273	Reserve	

[Data type] Integer axis type

[Data unit]

[Data scope]

[Validity method]

4274	Reserve	

[Data type] Integer axis type

[Data unit]

[Data scope]

[Validity method]

4275	Reserve	

[Data type] Integer axis type

[Data unit]

[Data scope]

[Validity method]

4276	Reserve	

[Data type] Integer axis type

[Data unit]

[Data scope]

[Validity method]

4277	Reserve	

[Data type] Integer axis type

[Data unit]

[Data scope]

[Validity method]

4278	Reserve	

[Data type] Integer axis type

[Data unit]

[Data scope]

[Validity method] Effective Immediately

4279	Reserve	

[Data type] Integer axis type

[Data scope]

[Validity method]

4280	Reserve	

[Data type] Integer axis type

[Data unit]

[Data scope]

[Validity method]

4281	Reserve	

[Data type] Integer axis type

[Data unit]

[Data scope]

[Validity method] Effective Immediately

4282	Reserve	

[Data type] Integer axis type

[Data unit]

[Data scope]

[Validity method]

4283	Reserve	

[Data type] Integer axis type

[Data unit]

[Data scope]

[Validity method]

4284	Reserve	

[Data type] Integer axis type

[Data unit]

[Data scope]

[Validity method]

4285	Reserve	

[Data type] Integer axis type

[Data unit]

[Data scope]

[Validity method]

4286	Reserve	

[Data type] Integer axis type

[Data unit]

[Data scope]

[Validity method]

4287	Reserve	10

[Data type] Integer axis type

[Data unit]

[Data scope]

[Validity method]

4288	Mode selection of speed switched to position mode	0

[Data type] Integer axis type

[Data scope] 0 or 1

[Validity method] Effective Immediately

4289	Mode selection of position switched to speed mode	0

[Data type] Integer axis type

[Data scope] 0 or 1

[Validity method] Effective Immediately

4290	Low position of speed/position switch reference point	0

[Data type] Integer axis type

[Data scope] 0~9999

[Validity method] Effective Immediately

4291	High position of speed/position switch reference point	2

[Data type] Integer axis type

[Data scope] 0~30000

[Validity method] Effective Immediately

4292	Reserve	

[Data type] Integer axis type

[Data unit]

[Data scope]

[Validity method]

4293	Reserve	

[Data type] Integer axis type

[Data unit]

[Data scope]

[Validity method]

4294	Reserve	

[Data type] Integer axis type

[Data unit]

[Data scope]

[Validity method]

4295	Reserve	

[Data type] Integer axis type

[Data scope] 0~30

[Validity method]

4296	Selection of second position coded disc type	0

[Data type] Integer axis type

[Data unit]

[Data scope] 0~30

[Validity method] Effective Immediately

4297	Selection of position feedback input signal	

[Data type] Integer axis type

[Data unit] Coil number

[Data scope] 0~2

[Validity method] Effective Immediately

4298	Number of second position encoder lines	1024

[Data type] Integer axis type

[Data scope] 10~30000

[Validity method] Effective Immediately

4299	Orientation speed	100

[Data type] Integer axis type

[Data unit] rpm

[Data scope] 10~1000

[Validity method] Effective Immediately

4300	Orientation direction selection	0

[Data type] Integer axis type

[Data unit]

[Data scope] 0~2

[Validity method] Effective Immediately

4301	Second position feedback input signal invert	0

[Data type] Integer axis type

[Data unit]

[Data scope] 0~1

[Validity method] Effective Immediately

4302	Position window when positioning	2

[Data type] Integer axis type

[Data unit] plus

[Data scope] 0~100

[Validity method] Effective Immediately

4303	Low orientation position	0

[Data type] Integer axis type

[Data unit] plus

[Data scope] 0~30000

[Validity method] Effective Immediately

4304	High orientation position	0

[Data type] Integer axis type

[Data unit] plus

[Data scope] 0~30000

[Validity method] Effective Immediately

4305	Reserve	

[Data type] Integer axis type

[Data unit]

[Data scope]

[Validity method]

4306	Reserve	

[Data type] Integer axis type

[Data unit]

[Data scope]

[Validity method]

4307	Reserve	

[Data type] Integer axis type

[Data unit]

[Data scope]

[Validity method]

4308	Reserve	

[Data type] Integer axis type

[Data scope]

[Validity method]

4309	Reserve	

[Data type] Integer axis type

[Data unit]

[Data scope]

[Validity method]

4310	Reserve	

[Data type] Integer axis type

[Data unit]

[Data scope]

[Validity method]

4311	Reserve	

[Data type] Integer axis type

[Data unit]

[Data scope]

[Validity method]

4312	Reserve	

[Data type] Integer axis type

[Data scope]

[Validity method]

4313	Reserve	

[Data type] Integer axis type

[Data scope]

[Validity method]

4314	Reserve	

[Data type] Integer axis type

[Data unit]

[Data scope]

[Validity method] Effective Immediately

4315	Reserve	

[Data type] Integer axis type

[Data scope]

[Validity method]

4316	Reserve	

[Data type] Integer axis type

[Data unit]

[Data scope]

[Validity method]

4317	Reserve	

[Data type] Integer axis type

[Data unit]

[Data scope]

[Validity method]

4318	Internal force enabled	0

[Data type] Integer axis type

[Data unit]

[Data scope] 0 or 1

[Validity method]

4319	Reserve	

[Data type] Integer axis type

[Data unit]

[Data scope]

[Validity method]

4324	Set inching operation speed	120

[Data type] Integer axis type

[Data unit] rpm

[Data scope] 0~12000

[Validity method] Effective Immediately

4325	Torque limit of manual and inching modes	100

[Data type] Integer axis type

[Data unit] rpm

[Data scope] 0~300

[Validity method] Effective Immediately

4332	Spindle orientation alarm time	0

[Data type] Integer axis type

[Data unit]

[Data scope] 0~30000

[Validity method] Effective Immediately

4333	Internal CCW torque limit	300

[Data type] Integer axis type

[Data unit] %

[Data scope] 0~300

[Validity method] Effective Immediately

4334	Internal CW torque limit	-300

[Data type] Integer axis type

[Data unit] %

[Data scope] 0~12000

[Validity method] Effective Immediately

4337	Position out-of-tolerance is invalid	1

[Data type] Integer axis type

[Data unit]

[Data scope] 0 or 1

[Validity method] Effective Immediately

4339	Default phase alarm is invalid	1

[Data type] Integer axis type

[Data unit]

[Data scope] 0 or 1

[Validity method] Effective Immediately

4343	Brake time	375

[Data type] Integer axis type

[Data unit] 0.1ms

[Data scope] 0~32000

[Validity method] Effective Immediately

4344	Overload time	

[Data type] Integer axis type

[Data unit]

[Data scope] 0~32000

[Validity method] Effective Immediately

4345	Module overcurrent time	20

[Data type] Integer axis type

[Data unit] 1ms

[Data scope] 0~32000

[Validity method] Effective Immediately

4346	Long saturation alarm time of speed regulator	1000

[Data type] Integer axis type

[Data unit] 5ms

[Data scope] 0~30000

[Validity method] Effective Immediately

4347	Maximum motor deceleration time before allowing the action of power-off brake	5000

[Data type] Integer axis type

[Data unit] ms

[Data scope] 0~12000

[Validity method] Effective Immediately

4348	Servo locking delay time	50

[Data type] Integer axis type

[Data unit] ms

[Data scope] 0~30000

[Validity method] Effective Immediately

4349	Motor speed when the power-off brake is running	30

[Data type] Integer axis type

[Data unit] rpm

[Data scope] 0~300

[Validity method] Effective Immediately

4350	Spindle clamping interlocking delay time	0

[Data type] Integer axis type

[Data unit] ms

[Data scope] 0~32000

[Validity method] Effective Immediately

4356	GSKLINK servo axis number	1

[Data type] Integer axis type

[Data unit]

[Data scope] 0~20

[Validity method] Effective Immediately

4.15 Spindle control parameter (5000~5999)

	7#	6#	5#	4#	3#	2#	1#	0#
5000	LOOPS	GTT	SSPS	SABS	AVPC	ALMS		SAR

[Data type] Bit type

[Data scope] 0 or 1

[Factory Default] 0 0 0 0 0 1 1 0

[Validity method] Reset valid

SAR: Spindle speed arrival signal

0: Do not check

1: Check

ALMS: Spindle alarm valid level

0: Low level

1: High level

AVPC: Check of analog spindle rigid tapping speed and position switch signal

0: Yes

1: No

SABS: Selection of analog spindle output mode

0: Pulse + direction

1: AB phase

SSBS: Control output in analog spindle speed mode

0: Analog voltage

1: Pulse

GTT: Selection of spindle gear shift mode

0: Type M

1: Type T

LOOPS: Selection of spindle position control mode

0: Open loop

1 : Closed loop

	7#	6#	5#	4#	3#	2#	1#	0#
5001	LSP				SVAL			SVD

[Data type] Bit type

[Data scope] 0 or 1

[Factory Default] 0 0 0 0 0 0 0 0

[Validity method] Effective Immediately

SVD: Spindle speed fluctuation detection

0: Invalid

1:Valid

SVAL: Selection of spindle speed display

0: Command speed

1: Actual speed

LSPS: Recover spindle default parameters

0: Invalid

1:Valid

	7#	6#	5#	4#	3#	2#	1#	0#
5002					SWG		SCS	AXC

[Data type] Bit type

[Data scope] 0 or 1

[Factory Default] 0 0 0 0 0 0 0 0

[Validity method] Reset valid

SCS: Cs axis function

0: Invalid

1:Valid

AXC: Spindle positioning function

0: Invalid

1:Valid

SWG: Spindle alarm ignored

0: No

1: Yes

5005	System spindle number selection	1

[Data type] Real number

[Data scope] 1 ~ 2

[Validity method] Restart valid

5006	Selection of the number of analog spindles	0

[Data type] Bit type

[Data scope] 0 ~ 1

[Validity method] Restart valid

0: Analog spindle control is invalid

1: Analog spindle control is valid

5008	Spindle name	0

[Data type] Integer

[Data scope] 0~255

[Validity method] Reset valid

5010	Set spindle speed range for starting spindle speed fluctuation detection	2

[Data type] Integer

[Data unit] %

[Data scope] 1~100

[Validity method] Effective Immediately

5011	Spindle speed fluctuation rate allowed in spindle speed fluctuation detection	10

[Data type] Integer

[Data unit] %

[Data scope] 1~100

[Validity method] Effective Immediately

5012	Spindle speed fluctuation value allowed in spindle speed fluctuation detection	100

[Data type] Integer

[Data unit] rpm

[Data scope] 0~32767

[Validity method] Effective Immediately

5013	Time between change of the spindle speed command and start of the spindle speed fluctuation detection	2000

[Data type] Integer

[Data unit] ms

[Data scope] 0~999999

[Validity method] Effective Immediately

5020	Reserve	

[Data type]

[Data unit]

[Data scope]

[Validity method]

5021	Reserve	

[Data type]

[Data scope]

[Validity method]

5022	Reserve	

[Data type]

[Data scope]

[Validity method]

5023	Reserve	

[Data type]

[Data unit]

[Data scope]

[Validity method]

5100	Gain adjustment data of spindle speed analog output (0.01%)	10000

[Data type] Integer

[Data unit] 0.01%

[Data scope] 1000~12500

[Validity method] Reset valid

Set value=10/measured output analog voltage value at maximum speed of command spindle × 10000

5101	Compensation vale of spindle speed analog output bias voltage	0

[Data type] Integer

[Data scope] -1024 ~ 1024

[Validity method] Reset valid

Set zero drift compensation value of spindle speed command analog voltage

5102	Spindle acceleration	2222

[Data type] Real number

[Data unit] Rotation/ [sec × sec]

[Data scope] 0~99999

[Validity method] Reset valid

5103	Spindle analog output direction	0

[Data type] Integer

[Data scope] 0~3 (0: forward direction 1: reverse direction, 2 command invert, 3 feedback invert)

[Validity method] Reset valid

Set value	Description
0	Normal
1	Negation
2	Command invert
3	Feedback invert

5105	Maximum acceleration of spindle closed loop (tapping)	139

[Data type] Real number

[Data unit] r/[s×s]

[Data scope] 0~99999

[Validity method] Reset valid

5108	Pulses per rotation of position encoder (wires × 4)	4096

[Data type] Integer

[Data unit] Detection unit

[Data scope] 1~32767

[Validity method] Reset valid

5110	Motor speed when spindle gear is shifted	100

[Data type] Integer

[Data unit] r/min

[Data scope] 0~100000

[Validity method] Reset valid

5113	Check the time of spindle speed arrival signal	64

[Data type] Integer

[Data unit] ms

[Data scope] 0~255

[Validity method] Reset valid

5115	Maximum speed of spindle motor corresponding to 10V	6000

[Data type] Integer

[Data unit] rev/min

[Data scope] 0~100000

[Validity method] Reset valid

5116	Upper limit of spindle speed	6000

[Data type] Integer

[Data unit] rev/min

[Data scope] 0~100000

[Validity method] Reset valid

5118	Spindle safety limit speed	100

[Data type] Real number

[Data unit] rev/min

[Data scope] 0~6000

[Validity method] Reset valid

Note
Maximum spindle speed when PLC signal G033#4 SVL is set to "1".

5120	Maximum spindle speed of 1st gear	6000

[Data type] Real number

[Data unit] rpm

[Data scope] 0~100000

[Validity method] Reset valid

5121	Maximum spindle speed of 2nd gear	6000

[Data type] Real number

[Data unit] rpm

[Data scope] 0~100000

[Validity method] Reset valid

5122	Maximum spindle speed of 3rd gear	6000

[Data type] Real number

[Data unit] rpm

[Data scope] 0~100000

[Validity method] Reset valid

5123	Maximum spindle speed of 4th gear	6000

[Data type] Real number

[Data unit] rpm

[Data scope] 0~100000

[Validity method] Reset valid

5130	Spindle speed of gear 1 - gear 2 switching point	6000

[Data type] Real number

[Data unit] rpm

[Data scope] 0~100000

[Validity method] Reset valid

5131	Spindle speed of gear 2 - gear 3 switching point	6000

[Data type] Real number

[Data unit] rpm

[Data scope] 0~100000

[Validity method] Reset valid

5135	Spindle speed of gear 1 - gear 2 switching point in tapping cycle	6000

[Data type] Real number

[Data unit] rpm

[Data scope] 0~100000

[Validity method] Reset valid

5136	Spindle speed of gear 2 - gear 3 switching point in tapping cycle	6000

[Data type] Real number

[Data unit] rpm

[Data scope] 0~100000

[Validity method] Reset valid

5160	Number of gear teeth on spindle side (1st gear)	1

[Data type] Integer

[Data scope] 1~999999

[Validity method] Reset valid

$$\text{Motor speed} \times \left\{ \begin{array}{l} \dfrac{5165}{5160}\ (1^{st}\ \text{gear changing ratio}) \\ \dfrac{5166}{5161}\ (2^{nd}\ \text{gear changing ratio}) \\ \dfrac{5167}{5162}\ (3^{rd}\ \text{gear changing ratio}) \\ \dfrac{5168}{5163}\ (4^{th}\ \text{gear changing ratio}) \end{array} \right\} = \text{Spindle speed}$$

5161	Number of gear teeth on spindle side (2nd gear)	1

[Data type] Integer

[Data scope] 1~999999

[Validity method] Reset valid

5162	Number of gear teeth on spindle side (3rd gear)	1

[Data type] Integer

[Data scope] 1~999999

[Validity method] Reset valid

5163	Number of gear teeth on spindle side (4th gear)	1

[Data type] Integer

[Data scope] 1~999999

[Validity method] Reset valid

5165	Number of low gear teeth on spindle motor side	1

[Data type] Integer

[Data scope] 1~999999

[Validity method] Reset valid

5166	Number of middle and low gear teeth on spindle motor side	1

[Data type] Integer

[Data scope] 1~999999

[Validity method] Reset valid

5167	Number of middle and high gear teeth on spindle motor side	1

[Data type] Integer

[Data scope] 1~999999

[Validity method] Reset valid

5168	Number of high gear teeth on spindle motor side	1

[Data type] Integer

[Data scope] 1~999999

[Validity method] Reset valid

5170	Number of gear teeth of second code disc on spindle side (1st gear)	1

[Data type] Integer

[Data scope] 1~999999

[Validity method] Reset valid

5171	Number of gear teeth of second coded disc on spindle side (2nd gear)	1

[Data type] Integer

[Data scope] 1~999999

[Validity method] Reset valid

5172	Number of gear teeth of second coded disc on spindle side (3rd gear)	1

[Data type] Integer

[Data scope] 1~999999

[Validity method] Reset valid

5173	Number of gear teeth of second coded disc on spindle side (4th gear)	1

[Data type] Integer

[Data scope] 1~999999

[Validity method] Reset valid

5175	Number of gear teeth for spindle position encoder of second coded disc (1st gear)	1

[Data type] Integer

[Data scope] 1~999999

[Validity method] Reset valid

5176	Number of gear teeth for spindle position encoder of second coded disc (2nd gear)	1

[Data type] Integer

[Data scope] 1~999999

[Validity method] Reset valid

5177	Number of gear teeth for spindle position encoder of second coded disc (3rd gear)	1

[Data type] Integer

[Data scope] 1~999999

[Validity method] Reset valid

5178	Number of gear teeth for spindle position encoder of second coded disc (4th gear)	1

[Data type] Integer

[Data scope] 1~999999

[Validity method] Reset valid

5200	Position loop gain of the first gear controlled by Cs spindle	350

[Data type] Integer

[Data scope] 0~9999

[Validity method] Effective Immediately

5201	Position loop gain of the second gear controlled by Cs spindle	350

[Data type] Integer

[Data scope] 0~9999

[Validity method] Effective Immediately

5202	Position loop gain of the third gear controlled by Cs spindle	350

[Data type] Integer

[Data scope] 0~9999

[Validity method] Effective Immediately

5203	Position loop gain of the fourth gear controlled by Cs spindle	350

[Data type] Integer

[Data scope] 0~9999

[Validity method] Effective Immediately

5210	Number of servo axis interpolated with Cs spindle control (Group 1)	0

[Data type] Integer

[Data scope] 0~8

[Validity method] Effective Immediately

5211	First gear position loop gain of servo axis interpolated with Cs spindle control	300

[Data type] Integer

[Data scope] 0~9999

[Validity method] Effective Immediately

5212	Second gear position loop gain of servo axis interpolated with Cs spindle control	300

[Data type] Integer

[Data scope] 0~9999

[Validity method] Effective Immediately

5213	Third gear position loop gain of servo axis interpolated with Cs spindle control	300

[Data type] Integer

[Data scope] 0~9999

[Validity method] Effective Immediately

5214	Fourth gear position loop gain of servo axis interpolated with Cs spindle control	300

[Data type] Integer

[Data scope] 0~9999

[Validity method] Effective Immediately

5220	Number of servo axis interpolated with Cs spindle control (Group 2)	0

[Data type] Integer

[Data scope] 0~8

[Validity method] Effective Immediately

5221	First gear position loop gain of servo axis interpolated with Cs spindle control	300

[Data type] Integer

[Data scope] 0~9999

[Validity method] Effective Immediately

5222	Second gear position loop gain of servo axis interpolated with Cs spindle control	300

[Data type] Integer

[Data scope] 0~9999

[Validity method] Effective Immediately

5223	Third gear position loop gain of servo axis interpolated with Cs spindle control	300

[Data type] Integer

[Data scope] 0~9999

[Validity method] Effective Immediately

5224	Fourth gear position loop gain of servo axis interpolated with Cs spindle control	300

[Data type] Integer

[Data scope] 0~9999

[Validity method] Effective Immediately

5230	Number of servo axis interpolated with Cs spindle control (Group 3)	0

[Data type] Integer

[Data scope] 0~8

[Validity method] Effective Immediately

5231	First gear position loop gain of servo axis interpolated with Cs spindle control	300

[Data type] Integer

[Data scope] 0~9999

[Validity method] Effective Immediately

5232	Second gear position loop gain of servo axis interpolated with Cs spindle control	300

[Data type] Integer

[Data scope] 0~9999

[Validity method] Effective Immediately

5233	Third gear position loop gain of servo axis interpolated with Cs spindle control	300

[Data type] Integer

[Data scope] 0~9999

[Validity method] Effective Immediately

5234	Fourth gear position loop gain of servo axis interpolated with Cs spindle control	300

[Data type] Integer

[Data scope] 0~9999

[Validity method] Effective Immediately

5240	Number of servo axis interpolated with Cs spindle control (Group 4)	0

[Data type] Integer

[Data scope] 0~8

[Validity method] Effective Immediately

5241	First gear position loop gain of servo axis interpolated with Cs spindle control	300

[Data type] Integer

[Data scope] 0~9999

[Validity method] Effective Immediately

5242	Second gear position loop gain of servo axis interpolated with Cs spindle control	300

[Data type] Integer

[Data scope] 0~9999

[Validity method] Effective Immediately

5243	Third gear position loop gain of servo axis interpolated with Cs spindle control	300

[Data type] Integer

[Data scope] 0~9999

[Validity method] Effective Immediately

5244	Fourth gear position loop gain of servo axis interpolated with Cs spindle control	300

[Data type] Integer

[Data scope] 0~9999

[Validity method] Effective Immediately

5250	First gear position gain in spindle positioning	300

[Data type] Integer

[Data scope] 0~9999

[Validity method] Effective Immediately

5251	Second gear position gain in spindle positioning	300

[Data type] Integer

[Data scope] 0~9999

[Validity method] Effective Immediately

5252	Third gear position gain in spindle positioning	300

[Data type] Integer

[Data scope] 0~9999

[Validity method] Effective Immediately

5253	Fourth gear position gain in spindle positioning	300

[Data type] Integer

[Data scope] 0~9999

[Validity method] Effective Immediately

5260	M codes for initiating spindle positioning	70

[Data type] Integer

[Data scope] 0~999

[Validity method] Effective Immediately

5261	M codes for starting Cs spindle	80

[Data type] Integer

[Data scope] 0~999

[Validity method] Effective Immediately

The following 4200 to 4455 default parameters vary according to the motor model, as detailed in the Appendix. Adaptive to GR2000 series servo drivers.

4200	Parameter change password	315

[Data type] Integer axis type

[Data scope] 0~9999

[Validity method] Effective Immediately

5301	Motor model code	65

[Data type] Integer axis type

[Data scope] 0~1329

[Validity method] Effective Immediately

5302	Selection of motor type	0

[Data type] Integer axis type

[Data scope] 0 or 1

[Validity method] Effective Immediately

5303	Power-on initial monitoring setting	0

[Data type] Integer axis type

[Data scope] 0~21

[Validity method] Effective Immediately

5304	Selection of operating mode	21

[Data type] Integer axis type

[Data scope] 9~25

[Validity method] Effective Immediately

5305	Reserve	

[Data type] Integer axis type

[Data unit]

[Data scope]

[Validity method]

5306	Reserve	

[Data type] Integer axis type

[Data unit]

[Data scope]

[Validity method]

5307	Reserve	

[Data type] Integer axis type

[Data unit]

[Data scope]

[Validity method]

5308	Reserve	

[Data type] Integer axis type

[Data unit]

[Data scope]

[Validity method]

5309	Reserve	

[Data type] Integer axis type

[Data unit]

[Data scope]

[Validity method]

5310	Reserve	

[Data type] Integer axis type

[Data unit]

[Data scope]

[Validity method]

5311	Reserve	

[Data type] Integer axis type

[Data unit]

[Data scope]

[Validity method]

5312	Reserve	

[Data type] Integer axis type

[Data scope]

[Validity method]

5313	Reserve	

[Data type] Integer axis type

[Data scope]

[Validity method]

5314	Reserve	0

[Data type] Integer axis type

[Data scope]

[Validity method]

5315	First proportional gain of speed loop	200

[Data type] Integer axis type

[Data unit] Hz

[Data scope] 10~3000

[Validity method] Effective Immediately

5316	First integral time constant of speed loop	100

[Data type] Integer axis type

[Data scope] 1~3000

[Validity method] Effective Immediately

5317	Current command filter coefficient	800

[Data type] Integer axis type

[Data scope] 10~5000

[Validity method] Effective Immediately

5318	Speed feedback detection filter coefficient	800

[Data type] Integer axis type

[Data scope] 10~5000

[Validity method] Effective Immediately

5319	First proportional gain of position loop	40

[Data type] Integer axis type

[Data unit]

[Data scope] 10~1000

[Validity method] Effective Immediately

5320	Reserve	0

[Data type] Integer axis type

[Data scope]

[Validity method]

5321	Reserve	

[Data type] Integer axis type

[Data unit] rpm

[Data scope] -6000~6000

[Validity method] Effective Immediately

5322	Reserve	0

[Data type] Integer axis type

[Data scope]

[Validity method]

5323	Reserve	

[Data type] Integer axis type

[Data unit]

[Data scope]

[Validity method]

5324	Reserve	

[Data type] Integer axis type

[Data unit]

[Data scope]

[Validity method]

5325	Position feedforward gain	0

[Data type] Integer axis type

[Data unit] %

[Data scope] 0~100

[Validity method] Effective Immediately

5326	Position feedforward low-pass filter coefficient	2000

[Data type] Integer axis type

[Data unit] Hz

[Data scope] 10~5000

[Validity method] Effective Immediately

5327	Reserve	

[Data type] Integer axis type

[Data unit]

[Data scope]

[Validity method]

5328	Position command direction invert	

[Data type] Integer axis type

[Data scope] 0 or 1

[Validity method] Effective Immediately

5329	Numerator of position command electronic gear ratio	1

[Data type] Integer axis type

[Data unit]

[Data scope] 1~32767

[Validity method] Effective Immediately

5330	Position command pulse division coefficient	1

[Data type] Integer axis type

[Data scope] 1~32767

[Validity method] Effective Immediately

5331	Position arrival scope	20

[Data type] Integer axis type

[Data unit] plus

[Data scope] 0~30000

[Validity method] Effective Immediately

5332	Position out-of-tolerance scope	400

[Data type] Integer axis type

[Data unit] 100plus

[Data scope] 0~4

[Validity method] Effective Immediately

5333	Reserve	0

[Data type]

[Data unit]

[Data scope]

[Validity method]

5334	Position output signal invert	0

[Data type] Integer axis type

[Data scope] 0~1

[Validity method] Effective Immediately

5335	Reserve	0

[Data type]

[Data unit]

[Data scope]

[Validity method]

5337	Number of position feedback output pulses	10000

[Data type] Integer axis type

[Data unit] plus

[Data scope] 1024~30000

[Validity method] Effective Immediately

5339	Reserve	0

[Data type]

[Data scope]

[Validity method]

5340	Reserve	0

[Data type]

[Data scope]

[Validity method]

5341	Reserve	0

[Data type]

[Data unit]

[Data scope]

[Validity method]

5342	Reserve	

[Data type]

[Data unit]

[Data scope]

[Validity method]

5343	Reserve	0

[Data type]

[Data scope]

[Validity method] Effective Immediately

5344	Reserve	0

[Data type]

[Data unit]

[Data scope]

[Validity method]

5345	Second proportional gain of speed loop	400

[Data type] Integer axis type

[Data unit] Hz

[Data scope] 10~3000

[Validity method] Effective Immediately

5346	Second integral time constant of speed loop	100

[Data type] Integer axis type

[Data scope] 1~3000

[Validity method] Effective Immediately

5348	Third proportional gain of speed loop	400

[Data type] Integer axis type

[Data unit] Hz

[Data scope] 10~3000

[Validity method] Effective Immediately

5349	Third integral time constant of speed loop	100

[Data type] Integer axis type

[Data scope] 1~3000

[Validity method] Effective Immediately

5350	Reserve	0

[Data type]

[Data unit] %

[Data scope] 0~32767

[Validity method] Effective Immediately

5351	Speed command forward and reverse invert	0

[Data type] Integer axis type

[Data scope] 0 or 1

[Validity method] Effective Immediately

5352	Reserve	

[Data type]

[Data unit]

[Data scope]

[Validity method]

5353	Reserve	

[Data type]

[Data unit]

[Data scope]

[Validity method]

5354	Maximum speed limit of speed command	2500

[Data type] Integer axis type

[Data unit] rpm

[Data scope] 1~30000

[Validity method] Effective Immediately

5355	Reserve	

[Data type]

[Data unit]

[Data scope]

[Validity method]

5356	Reserve	

[Data type]

[Data scope]

[Validity method]

5357	Speed command feedforward gain	0

[Data type] Integer axis type

[Data unit] ms

[Data scope] 0~30000

[Validity method] Effective Immediately

5358	Linear acceleration time constant	0

[Data type] Integer axis type

[Data unit] ms

[Data scope] 0~10000

[Validity method] Effective Immediately

5359	Linear acceleration deceleration time	0

[Data type] Integer axis type

[Data unit] ms

[Data scope] 1~4

[Validity method] Effective Immediately

5360	Reserve	0

[Data type] Integer axis type

[Data unit] 0.001

[Data scope] 0~6000

[Validity method] Effective Immediately

5361	Valid scope of speed arrival	5

[Data type] Integer axis type

[Data unit] %

[Data scope] 1~100

[Validity method] Effective Immediately

5362	Valid scope of zero speed output	5

[Data type] Integer axis type

[Data unit] %

[Data scope] 0~100

[Validity method] Effective Immediately

5363	Analog command multiplication coefficient	1

[Data type] Integer axis type

[Data unit]

[Data scope] 1~1024

[Validity method] Effective Immediately

5364	Analog command division coefficient	1

[Data type] Integer axis type

[Data unit]

[Data scope] 1~1024

[Validity method] Effective Immediately

5365	Reserve	

[Data type] Integer axis type

[Data unit]

[Data scope]

[Validity method]

5366	Reserve	

[Data type] Integer axis type

[Data unit]

[Data scope]

[Validity method]

5367	Reserve	

[Data type] Integer axis type

[Data unit]

[Data scope]

[Validity method]

5368	Reserve	

[Data type] Integer axis type

[Data unit]

[Data scope]

[Validity method]

5369	Reserve	

[Data type] Integer axis type

[Data unit]

[Data scope]

[Validity method]

5370	Reserve	

[Data type] Integer axis type

[Data unit]

[Data scope]

[Validity method]

5371	Reserve	

[Data type] Integer axis type

[Data unit]

[Data scope]

[Validity method]

5372	Reserve	

[Data type] Integer axis type

[Data unit]

[Data scope]

[Validity method]

5373	Reserve	

[Data type] Integer axis type

[Data unit]

[Data scope]

[Validity method]

5374	Reserve	

[Data type] Integer axis type

[Data unit]

[Data scope]

[Validity method]

5375	Reserve	

[Data type] Integer axis type

[Data unit]

[Data scope]

[Validity method] Effective Immediately

5376	Reserve	

[Data type] Integer axis type

[Data unit]

[Data scope]

[Validity method] Effective Immediately

5377	Reserve	

[Data type] Integer axis type

[Data unit]

[Data scope]

[Validity method] Effective Immediately

5378	Reserve	

[Data type] Integer axis type

[Data unit]

[Data scope]

[Validity method] Effective Immediately

5379	Reserve	

[Data type] Integer axis type

[Data scope]

[Validity method]

5380	Reserve	

[Data type] Integer axis type

[Data unit]

[Data scope]

[Validity method]

5381	Reserve	

[Data type] Integer axis type

[Data unit]

[Data scope]

[Validity method] Effective Immediately

5382	Reserve	

[Data type] Integer axis type

[Data unit]

[Data scope]

[Validity method]

5383	Reserve	

[Data type] Integer axis type

[Data unit]

[Data scope]

[Validity method]

5384	Reserve	

[Data type] Integer axis type

[Data unit]

[Data scope]

[Validity method]

5385	Reserve	

[Data type] Integer axis type

[Data unit]

[Data scope]

[Validity method]

5386	Reserve	

[Data type] Integer axis type

[Data unit]

[Data scope]

[Validity method]

5387	Reserve	

[Data type] Integer axis type

[Data unit]

[Data scope]

[Validity method]

5388	Mode selection of speed switched to position mode	0

[Data type] Integer axis type

[Data scope] 0 or 1

[Validity method] Effective Immediately

5389	Mode selection of position switched to speed mode	0

[Data type] Integer axis type

[Data scope] 0 or 1

[Validity method] Effective Immediately

5390	Low position of speed/position switch reference point	0

[Data type] Integer axis type

[Data scope] 0~9999

[Validity method] Effective Immediately

5391	High position of speed/position switch reference point	2

[Data type] Integer axis type

[Data scope] 0~30000

[Validity method] Effective Immediately

5392	Reserved	

[Data type] Integer axis type

[Data unit]

[Data scope]

[Validity method]

5393	Reserved	

[Data type] Integer axis type

[Data unit]

[Data scope]

[Validity method]

5394	Reserve	

[Data type] Integer axis type

[Data unit]

[Data scope]

[Validity method]

5395		

[Data type] Integer axis type

[Data scope] 0~30

[Validity method]

5396	Selection of second position coded disc type	0

[Data type] Integer axis type

[Data unit]

[Data scope] 0~30

[Validity method] Effective Immediately

5397	Selection of position feedback input signal	

[Data type] Integer axis type

[Data unit] Coil number

[Data scope] 0~2

[Validity method] Effective Immediately

5398	Number of second position encoder lines	1024

[Data type] Integer axis type

[Data scope] 10~30000

[Validity method] Effective Immediately

5399	Orientation speed	100

[Data type] Integer axis type

[Data unit] rpm

[Data scope] 10~1000

[Validity method] Effective Immediately

5400	Orientation direction selection	0

[Data type] Integer axis type

[Data unit]

[Data scope] 0~2

[Validity method] Effective Immediately

5401	Second position feedback input signal invert	0

[Data type] Integer axis type

[Data unit]

[Data scope] 0~1

[Validity method] Effective Immediately

5402	Position window when positioning	2

[Data type] Integer axis type

[Data unit] plus

[Data scope] 0~100

[Validity method] Effective Immediately

5403	Low orientation position	0

[Data type] Integer axis type

[Data unit] plus

[Data scope] 0~30000

[Validity method] Effective Immediately

5404	High orientation position	0

[Data type] Integer axis type

[Data unit] plus

[Data scope] 0~30000

[Validity method] Effective Immediately

5405	Reserved	

[Data type] Integer axis type

[Data unit]

[Data scope]

[Validity method]

5406	Reserved	

[Data type] Integer axis type

[Data unit]

[Data scope]

[Validity method]

5407	Reserved	

[Data type] Integer axis type

[Data unit]

[Data scope]

[Validity method]

5408	Reserved	

[Data type] Integer axis type

[Data scope]

[Validity method]

5409	Reserved	

[Data type] Integer axis type

[Data unit]

[Data scope]

[Validity method]

5410	Reserved	

[Data type] Integer axis type

[Data unit]

[Data scope]

[Validity method]

5411	Reserved	

[Data type] Integer axis type

[Data unit]

[Data scope]

[Validity method]

5412	Reserved	

[Data type] Integer axis type

[Data scope]

[Validity method]

5413	Reserved	

[Data type] Integer axis type

[Data scope]

[Validity method]

5414	Reserved	

[Data type] Integer axis type

[Data unit]

[Data scope]

[Validity method] Effective Immediately

5415	Reserved	

[Data type] Integer axis type

[Data scope]

[Validity method]

5416	Reserved	

[Data type] Integer axis type

[Data unit]

[Data scope]

[Validity method]

5417	Reserved	

[Data type] Integer axis type

[Data unit]

[Data scope]

[Validity method]

5418	Internal force enabled	0

[Data type] Integer axis type

[Data unit]

[Data scope] 0 or 1

[Validity method]

5419	Reserved	

[Data type] Integer axis type

[Data unit]

[Data scope]

[Validity method]

5424	Set inching operation speed	120

[Data type] Integer axis type

[Data unit] rpm

[Data scope] 0~12000

[Validity method] Effective Immediately

5425	Torque limit of manual and inching modes	100

[Data type] Integer axis type

[Data unit] rpm

[Data scope] 0~300

[Validity method] Effective Immediately

5432	Spindle orientation alarm time	0

[Data type] Integer axis type

[Data unit]

[Data scope] 0~30000

[Validity method] Effective Immediately

5433	Internal CCW torque limit	300

[Data type] Integer axis type

[Data unit] %

[Data scope] 0~300

[Validity method] Effective Immediately

5434	Internal CW torque limit	-300

[Data type] Integer axis type

[Data unit] %

[Data scope] 0~12000

[Validity method] Effective Immediately

5437	Position out-of-tolerance is invalid	1

[Data type] Integer axis type

[Data unit]

[Data scope] 0 or 1

[Validity method] Effective Immediately

5439	Default phase alarm is invalid	1

[Data type] Integer axis type

[Data unit]

[Data scope] 0 or 1

[Validity method] Effective Immediately

5443	Brake time	375

[Data type] Integer axis type

[Data unit] 0.1ms

[Data scope] 0~32000

[Validity method] Effective Immediately

5444	Overload time	

[Data type] Integer axis type

[Data unit]

[Data scope] 0~32000

[Validity method] Effective Immediately

5445	Module overcurrent time	20

[Data type] Integer axis type

[Data unit] 1ms

[Data scope] 0~32000

[Validity method] Effective Immediately

5446	Long saturation alarm time of speed regulator	1000

[Data type] Integer axis type

[Data unit] 5ms

[Data scope] 0~30000

[Validity method] Effective Immediately

5447	Maximum motor deceleration time before allowing the action of power-off brake	5000

[Data type] Integer axis type

[Data unit] ms

[Data scope] 0~12000

[Validity method] Effective Immediately

5448	Servo locking delay time	50

[Data type] Integer axis type

[Data unit] ms

[Data scope] 0~30000

[Validity method] Effective Immediately

5449	Motor speed when the power-off brake is running	30

[Data type] Integer axis type

[Data unit] rpm

[Data scope] 0~300

[Validity method] Effective Immediately

5450	Spindle clamping interlocking delay time	0

[Data type] Integer axis type

[Data unit] ms

[Data scope] 0~32000

[Validity method] Effective Immediately

5456	GSKLINK servo axis number	1

[Data type] Integer axis type

[Data unit]

[Data scope] 0~20

[Validity method] Effective Immediately

4.16 User macroprogram parameters (6000~6999)

	7#	6#	5#	4#	3#	2#	1#	0#
6001	TSE					CCV	CLV	TCS

[Data type] Bit type

[Data scope] 0 or 1

[Factory Default] 0 0 0 0 0 0 0 0

[Validity method] Reset valid

TCS: T code calls subprogram 9000

0: Invalid

1:Valid

CLV: Local variables 1 - 33

0: Reset and cleared to "Empty"

1: Reset and do not clear

CCV: Public variables 100 - 199

0: Reset and cleared to "Empty"

1: Reset and do not clear

TSE: Macro interruption signal triggering mode

0: State triggering

1: Edge triggering

6050	G code calls macroprogram O9010	0

6051	G code calls macroprogram O9011	0

6052	G code calls macroprogram O9012	0

6053	G code calls macroprogram O9013	0

6054	G code calls macroprogram O9014	0

6055	G code calls macroprogram O9015	0

6056	G code calls macroprogram O9016	0

6057	G code calls macroprogram O9017	0

6058	G code calls macroprogram O9018	0

6059	G code calls macroprogram O9019	0

[Data type] Integer

[Data scope] 0~999

[Validity method] Reset valid

Set G code for the user macroprogram with program calling number of 9010 - 9019.

> Note
> It is invalid when the set value is 0, and G00 cannot call macroprogram.

6071	M code calls subprogram O9001	0

6072	M code calls subprogram O9002	0

6073	M code calls subprogram O9003	0

6074	M code calls subprogram O9004	0

6075	M code calls subprogram O9005	0

6076	M code calls subprogram O9006	0

6077	M code calls subprogram O9007	0

6078	M code calls subprogram O9008	0

6079	M code calls subprogram O9009	0

[Data type] Integer

[Data scope] 0~999

[Validity method] Reset valid

Set M code that calls the user macroprogram with program number 9001~9009.

> Note
> It is invalid when the set value is 0, and M00 cannot call subprogram.

6080	M code calls macroprogram O9020	0

6081	M code calls macroprogram O9021	0

6082	M code calls macroprogram O9022	0

6083	M code calls macroprogram O9023	0

6084	M code calls macroprogram O9024	0

6085	M code calls macroprogram O9025	0

6086	M code calls macroprogram O9026	0

6087	M code calls macroprogram O9027	0

6088	M code calls macroprogram O9028	0

6089	M code calls macroprogram O9029	0

[Data type] Integer

[Data unit] 0~999

[Validity method] Reset valid

Set M code that calls the user macroprogram with program number 9020~9029.

> Note
> It is invalid when the set value is 0, and M00 cannot call user macroprogram.

4.17 PLC axis control parameters (7000~7199)

7010	DI/DO group selection for each axis in PLC axis control	0

[Data type] Integer axis type

[Data scope] 0-8

[Validity method] Restart valid

This parameter is set to the DI/DO group number used for the control axis command for each axis in PLC axis control.

Set value	Meaning

0	Fail to use PLC axis control
1	Use DI/DO signal of Group A
2	Use DI/DO signal of Group B
3	Use DI/DO signal of Group C
4	Use DI/DO signal of Group D
5	Use DI/DO signal of Group E
6	Use DI/DO signal of Group F
7	Use DI/DO signal of Group G
8	Use DI/DO signal of Group H

	7#	6#	5#	4#	3#	2#	1#	0#
7011								PMC

[Data type] Bit type

[Data scope] 0 or 1

[Factory Default] 0 0 0 0 0 0 0 0

[Validity method] Reset valid

PMC: PMC axis speed control unit

0: 1rpm

1: 0.1rpm

4.18 Angular axis control parameter (7100~7119)

	7#	6#	5#	4#	3#	2#	1#	0#
7100							SAXJ	SAXE

[Data type] Bit type

[Data scope] 0 or 1

[Factory Default] 0 0 0 0 0 0 0 0

[Validity method] Reset valid

SAXE: Angular axis control

0: Invalid

1:Valid

SAXJ: Manual function of oblique axis control

0: Invalid

1:Valid

7110	Number of the angular axis	1

[Data type] Integer type

[Data scope] 1~3

[Validity method] Reset valid

7111	Number of the orhtogonal axis	1

[Data type] Integer type

[Data scope] 1~3

[Validity method] Reset valid

7112	Angle of the angular axis	0.000

[Data type] Real number

[Data scope] -180~180; input is prohibited for -105~-75 and 75~105. Anticlockwise centering the linear axis is positive.

[Validity method] Reset valid

4.19 Normal direction control parameter (7120~7139)

7120	Normal axis number	0

[Data type] Integer type

[Data scope] 1~8

[Validity method] Reset valid

7121	Normal linkage movement length	0

[Data type] Real number axis type

[Data unit] mm

[Data scope] -999999.9999~999999.9999

[Validity method] Reset valid

7130	Tool normal vector at zero degree	1

[Data type] Real number axis type

[Data unit] mm

[Data scope] -999999.9999~999999.9999

[Validity method] Reset valid

4.20 Abnormal load detection control parameter (7201~7229)

	7#	6#	5#	4#	3#	2#	1#	0#
7201								ABDW

[Data type] Axis type

[Data scope] 0 or 1

[Factory Default] 0 0 0 0 0 0 0 0

[Validity method] Reset valid

ABDW: Abnormal servo load detection function

0: Invalid

1:Valid

	7#	6#	5#	4#	3#	2#	1#	0#
7202								SPMT

[Data type] Bit type

[Data scope] 0 or 1

[Factory Default] 0 0 0 0 0 0 0 0

[Validity method] Reset valid

SPMT: Abnormal spindle load detection function

0: Invalid

1:Valid

7211	Abnormal servo load detection limit	100

[Data type] Integer

[Data unit] %

[Data scope] 0~500

[Validity method] Reset valid

7212	Abnormal servo load detection limit at acceleration and deceleration	100

[Data type] Integer

[Data unit] %

[Data scope] 0~500

[Validity method] Reset valid

7221	Abnormal spindle load detection limit	100

[Data type] Integer

[Data unit] %

[Data scope] 0~500

[Validity method] Reset valid

7222	Abnormal spindle load detection limit at acceleration/deceleration	100

[Data type] Integer

[Data unit] %

[Data scope] 0~500

[Validity method] Reset valid

4.21 Polygon cutting function parameter (7610~7629)

7610	Control axis number of tool rotating axis for polygon cutting	0

[Data type] Integer

[Data scope] 0~8

[Validity method] Reset valid

7620	Amount of movement per rotation of tool rotating axis for polygon cutting	0

[Data type] Real number

[Data unit] mm

[Data scope] 0~9999

[Validity method] Reset valid

7621	Maximum allowable speed of tool rotating axis	0

[Data type] Integer

[Data unit] rpm

[Data scope] 0~99999

[Validity method] Reset valid

4.22 Robot control parameter (7800~7899)

7800	Robot manual function is valid	0

[Data type] Integer

[Data scope] 0~1

[Validity method] Reset valid

7810	First arm length of robot	0

[Data type] Real number

[Data unit] mm

[Data scope] 0~99999.9999

[Validity method] Reset valid

7811	Second arm length of robot	0

[Data type] Real number

[Data unit] mm

[Data scope] 0~99999.9999

[Validity method] Reset valid

7820	Vector of the first joint axis to the rotating axis of the large grinding wheel	0

[Data type] Real number axis type

[Data unit] mm

[Data scope] -9999.9999~9999.9999

[Validity method] Reset valid

7830	Vector of the rotating axis of the large grinding wheel to the center of the large grinding wheel	0

[Data type] Real number axis type

[Data unit] mm

[Data scope] -9999.9999~9999.9999

[Validity method] Reset valid

7840	Vector of the first joint axis to the rotating axis of the small grinding wheel	0

[Data type] Real number axis type

[Data unit] mm

[Data scope] -9999.9999~9999.9999

[Validity method] Reset valid

7850	Vector of the rotating axis of the small grinding wheel to the center of the small grinding wheel	0

[Data type] Real number axis type

[Data unit] mm

[Data scope] -9999.9999~9999.9999

[Validity method] Reset valid

4.23 5-axis machining parameters (8000~8999)

8010	Type of machine structure	12

[Data type] Integer

[Data scope] 0~21

[Validity method] Reset valid

	Type of machine structure
2	Tool rotation type
12	Table rotation type
21	Mix type

8012	Axial direction of the first rotating axis	2

[Data type] Integer

[Data scope] 0~8

[Validity method] Reset valid

	Axial direction of the first rotating axis
1	Axial direction of rotation around Axis X
2	Axial direction of rotation around Axis Y
3	Axial direction of rotation around Axis Z

8016	Axial direction of the second rotating axis	3

[Data type] Integer

[Data scope] 0~8

[Validity method] Reset valid

	Axial direction of the second rotating axis
1	Axial direction of rotation around Axis X
2	Axial direction of rotation around Axis Y
3	Axial direction of rotation around Axis Z

8018	Rotation direction of the first rotating axis	1

[Data type] Bit type

[Data scope] 0~1

[Validity method] Reset valid

0: Reverse

1: Forward

It is used to set the rotation direction of the first rotating axis when the turntable type machine executes G53.1

8019	Axial direction of tool axis	3

[Data type] Integer

[Data scope] 0~8

[Validity method] Reset valid

	Axial direction of tool axis
1	Axial direction of rotation around Axis X
2	Axial direction of rotation around Axis Y
3	Axial direction of rotation around Axis Z

8020	Turntable position	0

[Data type] Real number axis type

[Data unit] mm

[Data scope] -10000~10000

[Validity method] Reset valid

Note Including the coordinates of Axis X, Axis Y and Axis Z.

8021	Vector of the first rotating axis to the second rotating axis	0

[Data type] Real number axis type

[Data unit] mm

[Data scope] -10000~10000

[Validity method] Reset valid

Note
Including the coordinates of Axis X, Axis Y and Axis Z.

8022	Vector of tool axis to tool rotating axis	0

[Data type] Real number axis type

[Data unit] mm

[Data scope] -10000~10000

[Validity method] Reset valid

Note
Including the coordinates of Axis X, Axis Y and Axis Z.

8023	Vector of the second rotating axis of the tool to the first rotating axis of the tool	0

[Data type] Real number axis type

[Data unit] mm

[Data scope] -10000~10000

[Validity method] Reset valid

Note
Including the coordinates of Axis X, Axis Y and Axis Z.

8030	Inclination angle when the first rotating axis is an angular axis	0

[Data type] Real number axis type

[Data unit] Degree

[Data scope] 0~360

[Validity method] Reset valid

8031	Inclination angle when the second rotating axis is the angular axis	0

[Data type] Real number axis type

[Data unit] Degree

[Data scope] 0~360

[Validity method] Reset valid

8100	Smoothing accuracy 1 of rotating axis	0

[Data type] Real number

[Data unit] Degree

[Data scope] 0~10

[Validity method] Reset valid

8101	Smoothing accuracy 2 of rotating axis	0

[Data type] Real number

[Data unit] Degree

[Data scope] 0~10

[Validity method] Reset valid

The larger the parameters 8100 and 8101 are set, the higher the machining efficiency is, but the worse the accuracy is. It is recommended that these two parameters be set to the same value, with recommended setting of 0.01~0.03.

When parameters 8100 and 8101 are both set to 0, the smoothing algorithm is turned off.

Note: When the smoothing algorithm or filtering algorithm is turned on, the interpolation period shall be set to 4 ms, i.e. parameter 0811 set to 4.

8110	Filtering accuracy of tool tip point	0

[Data type] Real number

[Data unit] mm

[Data scope] 0~2

[Validity method] Reset valid

The larger the parameter is set, the higher the machining efficiency is, but the worse the accuracy is. Recommended setting of 0.005~0.02.

8111	Filtration accuracy of rotating axis	0

[Data type] Real number

[Data unit] Degree

[Data scope] 0~2

[Validity method] Reset valid

The larger the parameter is set, the higher the machining efficiency is, but the worse the accuracy is. Recommended setting shall be 0.005~0.03 and consistent with 8100.

8112	Maximum filtering length	0

[Data type] Real number

[Data unit] mm

[Data scope] 0~10

[Validity method] Reset valid

The larger the parameter is set, the easier the path is filtered. Recommended setting of 0.4~0.8.

8113	Maximum filtering angle	0

[Data type] Real number

[Data unit] mm

[Data scope] 0~10

[Validity method] Reset valid

The larger the parameter is set, the easier the path is filtered. Recommended setting of 3~7.

8114	Maximum number of blocks filtered	0

[Data type] Integer

[Data unit] Block

[Data scope] 0~20

[Validity method] Reset valid

Used to set the maximum number of program blocks that can be filtered out continuously by a filtering algorithm. Recommended setting of 10~20.

When 8114 is set to 0, the filtering algorithm is turned off.

8115	RTCP maximum acceleration	1.0

[Data type] Real

[Data unit] m/s2

[Data scope] 0.1~100

[Validity method] Reset valid

Appendix

Appendix I System Alarm List

1.1 System alarm (PS alarm)

Alarm signal	PS0002	Details	Need to restart after modifying the parameters to continue the operation
Analysis	Appear after modifying some system parameters. For example, 200-206, 800, 811, 1000, 1004, 2170-2172, 2800, 2806.		
Handling method	Need to restart to continue the operation.		
Alarm signal	PS0003	Details	Too many digits
Analysis	Program data input exceed the scope of system allowable value, for example: coordinate value X 999999.9999 is the maximum value in the machining program, and the system will give an alarm when this value is exceeded.		
Handling method	Check the data in the program to change that with too long digit to the appropriate value.		
Alarm signal	PS0004	Details	Address not found
Analysis	Fail to enter the correct character address at the beginning of program block. Instead, enter number or illegal character.		
Handling method	Check the modifying program of the appropriate program block.		
Alarm signal	PS0005	Details	No data after address
Analysis	No corresponding data is written after the address/command in the program, for example, command G, X, Y, Z, M appear separately.		
Handling method	Check the program addresses/commands and complete the data with commands that omit to write data.		
Alarm signal	PS0006	Details	Illegal use of minus sign
Analysis	A minus sign is entered or multiple minus signs are entered where a minus sign cannot be used.		
Handling method	Modify the program		
Alarm signal	PS0007	Details	Illegal use of decimal point
Analysis	There are extra decimal points in the program or decimal points are used where they cannot be used.		
Handling method	Check the program to remove the extra decimal point.		
Alarm signal	PS0009	Details	Enter illegal character address
Analysis	There are unusable character addresses in the program.		
Handling	Check the program and modify the appropriate address.		

method			
Alarm signal	PS0010	Details	Incorrect G code
Analysis	G code that the system does not have or that cannot be used is assigned in the program.		
Handling method	Check the program to change the wrong G code to the correct one.		
Alarm signal	PS0011	Details	No feed speed command
Analysis	Feed speed is not assigned in the cutting feed or is improper.		
Handling method	Modify the program		
Alarm signal	PS0012	Details	Address P is reused, with program modified
Analysis	Two or more addresses P appear in the same program block.		
Handling method	Separate the commands that can be used for address P into different program blocks.		
Alarm signal	PS0013	Details	Tool compensation method cannot assign unidirectional positioning
Analysis	There is also unidirectional positioning command G60 in the program block for establishing the tool compensation.		
Handling method	Modify the program, and G60 cannot be written in the same line with the tool compensation command.		
Alarm signal	PS0014	Details	G10 command format error
Analysis	Online modification of system parameter (G10), programming format error.		
Handling method	Modify the program to correct the G10 format.		
Alarm signal	PS0015	Details	Too many axes commanded
Analysis	Axis that does not exist or is not set by the system is assigned in the program.		
Handling method	Check program, delete redundant axis commands or check system parameter 1020 (whether the system parameter 800 is set correctly), and check whether the corresponding axes name is correct.		
Alarm signal	PS0016	Details	G10 does not allow the modification of such parameter
Analysis	The parameters that can be modified through G10 are: 1, 130, 1020-1021, 1031-1053, 1605-1642, 1801-1930, 1933-2034, 2112, 2113, 2600-2653. An alarm will be given if parameters other than these are assigned in the program.		
Handling method	Modify the program to delete parameter numbers other than those that can be modified by G10 command.		
Alarm signal	PS0018	Details	Wrong plane selection when commanding planar circular arc in length compensation
Analysis	When the length compensation is established in the program, the plane where the arc track is located is incorrectly selected.		

Handling method	Modify the program to select the correct plane to use the circular arc command.		
Alarm signal	PS0019	Details	Too many linkage movement axes commanded
Analysis	The number of linkage movement axes commanded in the same program exceeds the limit.		
Handling method	Modify the program		
Alarm signal	PS0020	Details	Out of radius tolerance
Analysis	In circular interpolation, the distance from the starting point to the endpoint cannot form a circular arc at the given radius R or the distance from the beginning to the arc center is different from that from the endpoint to the circular arc center.		
Handling method	Modify the program		
Alarm signal	PS0021	Details	Illegal plane axis commanded
Analysis	Axis not in the (G17 G18 G19) plane is assigned in the circular interpolation.		
Handling method	Modify the program		
Alarm signal	PS0022	Details	No circular arc radius
Analysis	The program does not assign a circular arc radius where the circular arc radius command is required.		
Handling method	Add the circular arc radius command to the program.		
Alarm signal	PS0024	Details	Input data out of range assigned by the system
Analysis	The data entered by G10 is out of system range.		
Handling method	Modify the program		
Alarm signal	PS0025	Details	The pitch compensation number is illegal or does not exist or the pitch compensation value is not assigned
Analysis	When using G10 to enter pitch compensation, the assigned pitch compensation number does not exist or is illegal, and the pitch compensation value is not assigned.		
Handling method	Modify the program		
Alarm signal	PS0026	Details	G51 cannot be in the same block with other commands
Analysis	G51 is not allowed to be in the same block with G10 and G65.		
Handling method	Modify the program, and write it line by line.		
Alarm signal	PS0027	Details	The parameter number modified by G10 is illegal or does not exist
Analysis	A parameter that does not exist in the system or an incorrect parameter number is assigned in		

	G10.		
Handling method	Modify the program		
Alarm signal	PS0028	Details	Illegal plane selection
Analysis	Plane switching is not possible in fixed cycle modal.		
Handling method	To modify the program, please cancel the fixed cycle, then switch planes or modify # 2000.0 parameter.		
Alarm signal	PS0029	Details	Illegal offset value
Analysis	The compensation value assigned by H is either too large or does not exist.		
Handling method	Modify the program		
Alarm signal	PS0030	Details	Illegal compensation number
Analysis	The compensation number assigned by D/H code is too large or does not exist. In addition, the value assigned by the additional workpiece coordinate system number assigned by P code exceeds the value assigned by the system.		
Handling method	Modify the program		
Alarm signal	PS0031	Details	Illegal P commanded in G10
Analysis	The data assigned by address P in G10 command is incorrect.		
Handling method	Modify the program to check whether the relevant data number to be modified online is correct.		
Alarm signal	PS0032	Details	Illegal compensation value in G10
Analysis	When the offset value is set by G10 or written by the system variable, the offset value exceeds the range assigned by the system.		
Handling method	Modify the program		
Alarm signal	PS0033	Details	Tool compensation does not find the inter-block point
Analysis	In tool compensation, the endpoint coordinate of the previous program block is not on-line in the next one.		
Handling method	Modify the program or check the tool compensation value.		
Alarm signal	PS0034	Details	Cannot lift tool or cancel tool compensation in circular arc command
Analysis	Cannot establish or cancel tool compensation in circular arc command.		
Handling method	Modify the program		
Alarm signal	PS0036	Details	Tool compensation mode cannot command G31 and G37

Analysis	G31 and G37 commands are not allowed in tool compensation.		
Handling method	Check whether there are G31 and G37 commands in the program of tool compensation, and modify the program.		
Alarm signal	PS0037	Details	Switching plane in tool compensation
Analysis	Switching plane (G17 G18 G19) is not allowed in tool compensation.		
Handling method	Check whether the program in the tool compensation switches planes, and modify the program.		
Alarm signal	PS0038	Details	There is interference in the circular arc program block
Analysis	Overcutting occurs in the tool radius compensation method because the circular arc starting point or endpoint is the same as the circular arc center.		
Handling method	Modify the program		
Alarm signal	PS0039	Details	The circular arc endpoint is not on the circular arc after the tool compensation
Analysis	The circular arc command is after the tool compensation, and #1810 parameter determines whether an alarm is given if the endpoint is not on the circular arc.		
Handling method	Modify the program		
Alarm signal	PS0040	Details	The tool compensation is changed in circular interpolation
Analysis	It is not allowed to change the radius compensation in the tool radius compensation mode.		
Handling method	Check whether there is D value in the program that modifies the compensation.		
Alarm signal	PS0041	Details	There is interference in CRC
Analysis	Overcutting occurs in the tool radius compensation mode.		
Handling method	Modify the program		
Alarm signal	PS0042	Details	Commanding G45-G48 is not allowed in the tool compensation
Analysis	Command G45-G48 is used in tool the compensation.		
Handling method	Modify the program to delete G45-G48 command.		
Alarm signal	PS0043	Details	Radius value out-of-tolerance
Analysis	#1810 parameter determines whether an alarm is given if the endpoint is not on the circular arc.		
Handling method	Modify the program		
Alarm signal	PS0044	Details	Commanding G27-G30 G53 is not allowed in the fixed cycle
Analysis	There are G27-G30 G53 commands in the fixed cycle.		

Handling method	Modify the program		
Alarm signal	PS0045	Details	Address Q is not found in the fixed cycle
Analysis	In the fixed cycle G73/G83, no cutting-in (Q) is assigned each time.		
Handling method	Modify the program		
Alarm signal	PS0046	Details	Illegal homing command
Analysis	In the 2nd, 3rd and 4th reference point returning commands, commands other than P2, P3, and P4 are given.		
Handling method	Modify the program		
Alarm signal	PS0047	Details	G10 and the fixed cycle cannot be used at the same time
Analysis	G10 command is used in the fixed cycle.		
Handling method	G10 command in the fixed cycle is deleted or the fixed cycle must be cancelled before G10 is executed.		
Alarm signal	PS0048	Details	Metric-imperial conversion command format is not correct
Analysis	Metric-imperial conversion can only be switched at the program header. Switching during program execution or subprogram is not allowed.		
Handling method	Modify the program		
Alarm signal	PS0051	Details	Moving error after CHF/CNR
Analysis	There is no fillet condition or the amount of movement is uncertain.		
Handling method	Modify the program		
Alarm signal	PS0053	Details	This condition cannot be determined or does not exist in the transfer type determination
Analysis	The four types (L_L, L_C, C_L, C_C) assigned by the system cannot be determined.		
Handling method	Modify the program		
Alarm signal	PS0054	Details	There is no related plane movement command in 8 consecutive program blocks after the tool compensation is established
Analysis	There is no movement command in relevant plane with more than 8 blocks assigned continuously in the tool radius compensation.		
Handling method	Modify the program		
Alarm signal	PS0055	Details	The number of movement commands is less than 2 from the establishment to the cancellation of the tool compensation

Analysis	After establishing tool compensation, the tool compensation is cancelled due to the assigned movement command less than two blocks.		
Handling method	Modify the program		
Alarm signal	PS0059	Details	Program number not found
Analysis	The assigned program number is not found in the external program number retrieval or external workpiece number retrieval. Either the assigned program is edited in the background or no non-modal macroprogram calls the program in memory.		
Handling method	Check program number and external sequence number.		
Alarm signal	PS0063	Details	S command is zero or illegal
Analysis	S code command value exceeds the range assigned by the system		
Handling method	Check the program		
Alarm signal	PS0064	Details	Illegal M code command
Analysis	The assigned M code is out of range or too many M codes is assigned in the same block.		
Handling method	Modify the program		
Alarm signal	PS0065	Details	Program block is too long
Analysis	Program block exceeds 32 units at maximum.		
Handling method	Modify the program		
Alarm signal	PS0066	Details	A unit string is too long
Analysis	The number of unit characters exceeds the maximum number of characters.		
Handling method	Modify the program		
Alarm signal	PS0067	Details	Illegal sequence number
Analysis	N sequence number is out of system range.		
Handling method	Modify the program		
Alarm signal	PS0068	Details	P/X pause time is illegal or times out
Analysis	Suspension time is out of system range.		
Handling method	Modify the program		
Alarm signal	PS0069	Details	Incompatible NC command
Analysis	Coordinate values conflict.		

Handling method	Check the program, and modify the coordinate value.		
Alarm signal	PS0070	Details	Insufficient memory capacity
Analysis	The system storage capacity is full or the copied program files exceed the remaining capacity of the system.		
Handling method	Delete unnecessary program files or reduce the number of program files.		
Alarm signal	PS0071	Details	Data not found
Analysis	No addresses to be searched is found. Or the assigned program is not found in the program retrieval.		
Handling method	Check data.		
Alarm signal	PS0072	Details	Program call error or M99 jump error, and modify the code
Analysis	M99 is used under commands or DNC that call multiple subprograms in the same block.		
Handling method	Modify the program		
Alarm signal	PS0073	Details	Program number already in use
Analysis	There is program name that needs to be created in the program storage directory.		
Handling method	Change program name.		
Alarm signal	PS0074	Details	Illegal program number
Analysis	Program number initial is not 'O' or exceeds the maximum range.		
Handling method	Modify the program		
Alarm signal	PS0075	Details	Operation fails, without authority
Analysis	Insufficient authority to modify system parameters. Please enter password.		
Handling method	Enter the password		
Alarm signal	PS0076	Details	Address P is not defined or illegal
Analysis	Address P is lacked in the program block of M98, G65 and G66.		
Handling method	Modify the program		
Alarm signal	PS0077	Details	Subprogram nesting error
Analysis	Subprogram calling nest exceeds 8 loops.		
Handling method	Modify the program		

Alarm signal	PS0078	Details	No corresponding program number or sequence number is found
Analysis	The program number and sequence number assigned by address P are not found in the program block of M98, M99, G65, or G66. The sequence number assigned by GOTO statement is not found or the called program is edited in background editing.		
Handling method	Modify the program or terminate background editing.		
Alarm signal	PS0079	Details	Lathe and milling machine cannot be switched directly
Analysis	Lathe and milling machine can be switched only when the system is in a reset state.		
Handling method	Modify the program		
Alarm signal	PS0080	Details	The automatic measurement start position of the tool is in the deceleration position
Analysis	The start position of the tool measurement is incorrect.		
Handling method	Modify the automatic measurement start position of the tool in the program.		
Alarm signal	PS0081	Details	No compensation number found in G37
Analysis	Tool compensation number is not assigned prior to execution of G37 command.		
Handling method	Modify the program		
Alarm signal	PS0082	Details	Commanding H code is not allowed in G37
Analysis	H code and G37 command cannot be assigned on the same line.		
Handling method	Modify the program		
Alarm signal	PS0083	Details	Illegal axis command in G37
Analysis	In automatic tool length measurement, an invalid axis or command is assigned as an incremental value.		
Handling method	Modify the program		
Alarm signal	PS0084	Details	G37 without arrival signal
Analysis	In the automatic tool compensation function, the measurement position arrival signal is not output within the range assigned by the parameter.		
Handling method	Perform the correct setting and operation.		
Alarm signal	PS0085	Details	Communication error
Analysis	Setting of input data bits or baud rate or input/output equipment is incorrect.		
Handling method	Check communication software setting or communication line.		

Alarm signal	PS0086	Details	The second storage travel detection boundary assigned by G22 is incorrect
Analysis	The negative limit value is greater than the positive limit value in the second travel detection.		
Handling method	Modify the program		
Alarm signal	PS0087	Details	Spiral or conical interpolation command is incorrect
Analysis	L or Q or H parameter in interpolation command is incorrect.		
Handling method	Check the program and modify the appropriate parameter value.		
Alarm signal	PS0090	Details	Illegal G107 command
Analysis	The condition to create or cancel cylindrical interpolation is incorrect.		
Handling method	Modify the program		
Alarm signal	PS0091	Details	Code that is not allowed is assigned in G107
Analysis	Code that is not allowed is commanded in cylindrical interpolation mode.		
	Please refer to Programming and Operation Manual G07.1 Command "Limitations and Precautions" for available G code.		
Handling method	Modify the program		
Alarm signal	PS0092	Details	G107 does not end normally or the tool compensation is not cancelled normally
Analysis	G107 cylindrical interpolation does not end normally.		
Handling method	Modify the program		
Alarm signal	PS0093	Details	Fixed cycle command cannot be assigned under G05
Analysis	Fixed cycle command is used in the program that G05 command takes effect.		
Handling method	Modify the program		
Alarm signal	PS0094	Details	Another program call is not allowed in G66 modal
Analysis	Another subprogram call is not allowed in G66 modal.		
Handling method	Modify the program		
Alarm signal	PS0095	Details	The polygon turning tool axis needs to be set to the rotating axis
Analysis	The polygon turning tool axis needs to be set to the rotating axis.		
Handling method	The axis number set by parameter 7610 must be set to 1 in parameter 1023.1.		
Alarm	PS0096	Details	The polygon cutting command is incorrect

signal			
Analysis	In the polygon turning mode, G51.2 is repeatedly commanded.		
Handling method	Modify the program		
Alarm signal	PS0097	Details	G51.2 has no P/Q or command value is out of range
Analysis	There is no P/Q command or command value is out of range in G52.1.		
Handling method	Both P and Q are commanded in G51.2, and it is ensured that the spindle command speed*Q/P is less than parameter #7621		
Alarm signal	PS0100	Details	The positioning spindle address and other axis movement commands are in the same program block
Analysis	The positioning spindle address set by the parameter cannot be in the same program block with other axis movement addresses.		
Handling method	Modify the program		
Alarm signal	PS0101	Details	The assigned data is out of valid range
Analysis	The relevant data is out of range assigned by the system.		
Handling method	Modify the program		
Alarm signal	PS0102	Details	The withdrawal length at the end of thread is greater than the thread machining length of the long axis
Analysis	The withdrawal length at the end is greater than the thread machining length.		
Handling method	Modify the program		
Alarm signal	PS0103	Details	Illegal thread command
Analysis	The number of inch thread teeth is 0 or too large.		
Handling method	Modify the program		
Alarm signal	PS0104	Details	There is interference at the starting point of the program
Analysis	There is interference in machining track.		
Handling method	Modify the program		
Alarm signal	PS0105	Details	The fixed cycle assigns the same contour endpoint as the starting point
Analysis	Fixed cycles G90, G92, G94 cannot have the same contour endpoint as the starting point.		
Handling method	Modify the program		
Alarm signal	PS0106	Details	R assigned by fixed cycle does not constitute enclosure with the endpoint and starting point
Analysis	Programming track does not form enclosure.		

Handling method	Modify the program		
Alarm signal	PS0107	Details	Direct drawing dimension programming command format is incorrect
Analysis	Graphic dimension programming format is incorrect.		
Handling method	Modify the program		
Alarm signal	PS0108	Details	Illegal condition in polar coordinate interpolation
Analysis	The condition is incorrect when polar coordinate interpolation starts or is cancelled:		
	1) Commands G12.1 and G13.1 are not assigned in separate program block.		
	2) G12.1/G13.1 is not commanded in tool tip radius compensation cancellation mode (G40).		
	3) G code restricted by G12.1/G13.1 is used.		
	4) Plane selection command is executed in G12.1 mode.		
	5) Parameter No. 5460 and No. 5461 are defined incorrectly.		
	6) T command is executed in polar coordinate interpolation mode and must be issued before polar coordinate interpolation begins.		
Handling method	Check the above conditions and modify the program or parameter value.		
Alarm signal	PS0109	Details	G161 command format error
Analysis	G161 format or parameter is incorrect.		
Handling method	Modify format or parameter value.		
Alarm signal	PS0111	Details	Operational data overflow
Analysis	The results of the calculation are out of range allowed by the system.		
Handling method	Modify the program		
Alarm signal	PS0112	Details	Divided by zero
Analysis	The assigned divisor is zero (including tan 90°).		
Handling method	Modify the program		
Alarm signal	PS0113	Details	Incorrect macro command
Analysis	Function commands that cannot be used are specified in the user macroprogram.		
Handling method	Modify the program		
Alarm signal	PS0114	Details	Macroprogram expression format is incorrect
Analysis	The macroprogram expression format is incorrect.		

Handling method	Modify the program		
Alarm signal	PS0115	Details	Illegal variable number is assigned
Analysis	The macro variable 3000 assignment expression is out of range.		
Handling method	Modify the program		
Alarm signal	PS0116	Details	There are no operands in the macroprogram expression
Analysis	Valid operands require to be filled in macroprogram expression.		
Handling method	Modify the program		
Alarm signal	PS0118	Details	Macroprogram bracket nesting is incorrect
Analysis	The bracket nesting in macroprogram exceeds the upper limit.		
Handling method	Modify the program		
Alarm signal	PS0119	Details	Illegal macro variable number
Analysis	Value that cannot be used as variable number is used in the user macroprogram.		
Handling method	Modify the program		
Alarm signal	PS0123	Details	Macro command is used in DNC
Analysis	There is macro command in the program that performs DNC machining.		
Handling method	Modify the program		
Alarm signal	PS0124	Details	DO-END is not corresponded one to one
Analysis	In the macroprogram statement, DO-END is not corresponded one to one.		
Handling method	Modify the program		
Alarm signal	PS0126	Details	Number of illegal cycles
Analysis	The number of cycles after DO-END is incorrect.		
Handling method	Modify the program		
Alarm signal	PS0127	Details	NC command and macroprogram command are in the same block
Analysis	NC command and macroprogram command statement coexist.		
Handling method	Modify the program		
Alarm	PS0128	Details	Illegal macroprogram sequence number

signal			
Analysis	The sequence number in the branch command is out of range assigned by the system or not retrieved.		
Handling method	Modify the program		
Alarm signal	PS0129	Details	Macroprogram jump command cannot go with other commands
Analysis	The macroprogram jump command and other commands are in the same program block.		
Handling method	Modify the program		
Alarm signal	PS0135	Details	Illegal angle command
Analysis	The indexing angle of the indexing table is not a multiple of the angle unit.		
Handling method	Modify the program		
Alarm signal	PS0136	Details	Illegal axis command
Analysis	In the indexing of indexing table, the other axis is commanded together with Axis B.		
Handling method	Modify the program		
Alarm signal	PS0140	Details	Incorrect program block address is assigned in multiple cycles
Analysis	The starting program block number is greater than the ending program block number or there is no assigned program block number.		
Handling method	Modify the program		
Alarm signal	PS0141	Details	Incorrect G (or M) code is assigned in multiple cycles
Analysis	G code that is not allowed is assigned in multiple cycles.		
Handling method	Modify the program		
Alarm signal	PS0142	Details	Too many program blocks are assigned in multiple cycles
Analysis	The number of program blocks assigned in the multiple cycles is out of the range assigned by the system.		
Handling method	Modify the program		
Alarm signal	PS0143	Details	Coordinate monotonicity in multiple cycles is incorrect
Analysis	X or Z monotonicity (unidirectional increase or decrease) in multiple cycles is incorrect.		
Handling method	Modify the program		
Alarm signal	PS0144	Details	The first program block format of multiple cycles is incorrect

Analysis	Illegal code is assigned in the starting program block of multiple cycles.		
Handling method	Modify the program		
Alarm signal	PS0145	Details	Code format in multiple cycles is incorrect
Analysis	The machining track enters an abnormal state in multiple cycles.		
Handling method	Modify the program		
Alarm signal	PS0146	Details	Machining track shape is incorrect
Analysis	The machining track shape is incorrect in multiple cycles.		
Handling method	Modify the program		
Alarm signal	PS0147	Details	The assigned circular arc cannot be roughed
Analysis	Circular arc command is not allowed in rough machining.		
Handling method	Modify the program		
Alarm signal	PS0148	Details	P/Q value is not assigned (or assigned as 0)
Analysis	Assigned P/Q is illegal.		
Handling method	Modify the program		
Alarm signal	PS0149	Details	The amount of tool retracting is greater than that of tool feeding
Analysis	The amount of tool retracting is greater than that of tool feeding.		
Handling method	Modify the program		
Alarm signal	PS0150	Details	Illegal tool group number
Analysis	No tool number given or illegal tool number obtained.		
Handling method	Check whether the tool given by the program is correct.		
Alarm signal	PS0154	Details	G51.1, G51, G68 cannot be in the same block
Analysis	G51.1, G51, G68 cannot be in the same program block.		
Handling method	Modify the program		
Alarm signal	PS0155	Details	G51 can only take P parameter in G110-G137 modal
Analysis	G51 command can only take P parameter in G110-G137 special fixed cycle modal.		
Handling method	Modify the program		

Alarm signal	PS0156	Details	(Null)
Analysis			
Handling method			
Alarm signal	PS0157	Details	The plane vector of the characteristic coordinate system is 0
Analysis	The plane vector of the characteristic coordinate system is 0.		
Handling method	Modify the program		
Alarm signal	PS0158	Details	Machine type is not supported
Analysis	Machine type is not supported.		
Handling method	Modify parameter 8010.		
Alarm signal	PS0160	Details	Level assignment is incorrect
Analysis	Level for NURBS interpolation is incorrect.		
Handling method	Modify P value.		
Alarm signal	PS0161	Details	Node has not been assigned
Analysis	NURBS interpolation does not assign node.		
Handling method	Modify the program		
Alarm signal	PS0162	Details	Node specification is incorrect
Analysis	Node range assigned by NURBS interpolation is incorrect.		
Handling method	Modify the program		
Alarm signal	PS0163	Details	Too many axes assigned
Analysis	Extra axes are assigned in the NURBS interpolation.		
Handling method	Modify the program		
Alarm signal	PS0164	Details	The interpolation method that cannot be used simultaneously in NURBS interpolation method is assigned
Analysis	The interpolation method that cannot be used simultaneously is assigned in NURBS interpolation.		
Handling method	Modify the program		
Alarm signal	PS0165	Details	G68.2 not found

Analysis	When assigning G53.1, it is found that it is not G68.2, G68.3, G68.4 modals.		
Handling method	Modify the program		
Alarm signal	PS0166	Details	E, K in G124/G125 are undefined or 0
Analysis	The number of holes E on side 1, 3 and that of holes K on side 2, 4 in G124/G125 are undefined or 0.		
Handling method	Modify the program		
Alarm signal	PS0167	Details	The program code in the same block is unreasonable. Please write it in blocks
Analysis	Program codes that cannot coexist is used in the same program block.		
Handling method	Modify the program		
Alarm signal	PS0170	Details	Fixed cycle drilling G73-G89 needs to be defined
Analysis	No fixed cycle drilling method G73-G89 is defined in G120-G125 continuous drilling cycles.		
Handling method	Fixed cycle drilling method G73-G89 is added in G120-G125 continuous drilling cycles.		
Alarm signal	PS0171	Details	I is not defined or I is 0
Analysis	"I" is undefined or 0 in G110-G137 special fixed cycle.		
Handling method	Modify the program to add I or make I not 0.		
Alarm signal	PS0172	Details	J is undefined or 0
Analysis	J is undefined or 0 in G110-G137 special fixed cycle.		
Handling method	Modify the program to add J or make J not 0.		
Alarm signal	PS0173	Details	W is too small or undefined
Analysis	W is undefined or 0 in the rough milling cycle.		
Handling method	Modify the program to add W or make W not 0.		
Alarm signal	PS0174	Details	Q is too small or undefined
Analysis	Q is undefined or 0 in the rough milling cycle.		
Handling method	Modify the program to add Q or make Q not 0.		
Alarm signal	PS0175	Details	L is too small or undefined
Analysis	L is undefined or too small in the G110-G137 special fixed cycle and G126 plane milling.		
Handling	Modify the program to add L or increase the value of L.		

method			
Alarm signal	PS0176	Details	V is too small or undefined
Analysis	V is undefined or 0 in the rough milling cycle.		
Handling method	Modify the program to add V or make V not 0.		
Alarm signal	PS0178	Details	I and J are too small or tool radius is too large
Analysis	I and J are too small or tool radius is too big in G110-G137 special fixed cycle.		
Handling method	Modify the program so that I and J increase or tool is changed.		
Alarm signal	PS0179	Details	L is too big
Analysis	L is too big in rough milling cycle.		
Handling method	Modify the program to reduce L.		
Alarm signal	PS0180	Details	U is smaller than D
Analysis	U is greater than D in the rectangular rough milling cycle.		
Handling method	Modify the program so that U is smaller than or equal to D.		
Alarm signal	PS0181	Details	The number of holes in special fixed cycle is zero or does not exist
Analysis	The number of holes is zero or does not exist in G120-G125 continuous drilling cycle.		
Handling method	Modify the program to add the number of holes parameter or make it not 0.		
Alarm signal	PS0183	Details	Special fixed cycle can only be performed in G17 plane
Analysis	G110-G137 special fixed cycle and G120-G125 continuous drilling cycle can only be performed in G17 plane.		
Handling method	Modify the program to G17 plane.		
Alarm signal	PS0185	Details	Corner radius U is too big or I and J are too small
Analysis	U is too big or both I and J are too small in G130-G137 rectangular milling groove cycle.		
Handling method	Modify the program so that U decreases or I and J increase.		
Alarm signal	PS0186	Details	U value is less than tool radius
Analysis	U value is less than tool radius in rectangle inner precision milling cycle.		
Handling method	Modify the program so that U increases or tool is changed.		
Alarm	PS0187	Details	I and J are too small or L is too big

signal			
Analysis	I and J are too small or L is too big in G110-G137 special fixed cycle.		
Handling method	Modify the program so that I and J increase or L decreases.		
Alarm signal	PS0189	Details	Special fixed cycle cannot assign G68G51G16G51.1
Analysis	Specification of G68 G51 G16 G51.1 is not allowed in special fixed cycle.		
Handling method	Modify the program		
Alarm signal	PS0200	Details	Algorithm protection error 0
Analysis	Forward-looking structure NC code is full.		
Handling method	Rerun after reset cancellation alarm; or contact support personnel.		
Alarm signal	PS0201	Details	Algorithm protection error 1
Analysis	Greater than the maximum speed change in a cycle. The amount of speed change exceeds the set value of parameter 1501.		
Handling method	Rerun after reset cancellation alarm; or contact support personnel.		
Alarm signal	PS0202	Details	Algorithm protection error 2
Analysis	Greater than the speed of the last cycle in the acceleration phase.		
Handling method	Rerun after reset cancellation alarm; or contact support personnel.		
Alarm signal	PS0203	Details	Algorithm protection error 3
Analysis	Greater than the speed of the first cycle in the deceleration phase.		
Handling method	Rerun after reset cancellation alarm; or contact support personnel.		
Alarm signal	PS0204	Details	Machine structure parameter setting error
Analysis	Such machine mechanism does not exist or is temporarily not supported by the system		
Handling method	Please refer to 5-axis machining parameter of the instruction, and fill in the machine mechanism parameters		
Alarm signal	PS0207	Details	Algorithm protection error 7
Analysis	Greater than program block length.		
Handling method	Rerun after reset cancellation alarm; or contact support personnel.		
Alarm signal	PS0210	Details	Algorithm protection error 10
Analysis	The number of adjusted acceleration cycles is greater than that of original acceleration cycles.		

Handling method	Rerun after reset cancellation alarm; or contact support personnel.		
Alarm signal	PS0211	Details	Algorithm protection error 11
Analysis	The number of adjusted deceleration cycles is greater than that of original deceleration cycles.		
Handling method	Rerun after reset cancellation alarm; or contact support personnel.		
Alarm signal	PS0212	Details	Algorithm protection error 12
Analysis	Total number of adjusted cycles ≤ 0		
Handling method	Rerun after reset cancellation alarm; or contact support personnel.		
Alarm signal	PS0215	Details	Algorithm protection error 15
Analysis	Greater than joining speed		
Handling method	Rerun after reset cancellation alarm; or contact support personnel.		
Alarm signal	PS0216	Details	Algorithm protection error 16
Analysis	Greater than maximum allowable speed		
Handling method	Rerun after reset cancellation alarm; or contact support personnel.		
Alarm signal	PS0217	Details	Algorithm protection error 17
Analysis	Greater than block head speed		
Handling method	Rerun after reset cancellation alarm; or contact support personnel.		
Alarm signal	PS0218	Details	Algorithm protection error 18
Analysis	Calculation error		
Handling method	Rerun after reset cancellation alarm; or contact support personnel.		
Alarm signal	PS0219	Details	Algorithm protection error 19
Analysis	During the exit phase, the condition is not met		
Handling method	Rerun after reset cancellation alarm; or contact support personnel.		
Alarm signal	PS0221	Details	G code transmission error
Analysis	System protective alarm.		
Handling method	Rerun after reset cancellation alarm; or contact support personnel.		
Alarm	PS0222	Details	Transmission plane error

signal			
Analysis	System protective alarm.		
Handling method	Rerun after reset cancellation alarm; or contact support personnel.		
Alarm signal	PS0224	Details	Arithmetic protection error 24
Analysis	Maximum acceleration error		
Handling method	Rerun after reset cancellation alarm; or contact support personnel.		
Alarm signal	PS0225	Details	Algorithm protection error 25
Analysis	Total interpolation period error		
Handling method	Rerun after reset cancellation alarm; or contact support personnel.		
Alarm signal	PS0226	Details	No homing
Analysis	This alarm is given when running the program because the system zero is lost in the machine with the stop homing after shut-down or there is an emergency stop and servo alarm.		
Handling method	Homing again.		
Alarm signal	PS0230	Details	Rigid tapping VPO signal is invalid
Analysis	In the rigid tapping process, the spindle servo position mode is canceled.		
Handling method	Check spindle servo.		
Alarm signal	PS0231	Details	Machine lock cancelled
Analysis	In the machine lock state, the program is run or the axis is moved, and then the machine lock is cancelled.		
Handling method	The machine with block homing needs to home, while that without stop homing needs to be directly reset.		
Alarm signal	PS0232	Details	Emergency stop alarm
Analysis	In case of emergency, the emergency stop button is pressed to prohibit the machine from running.		
Handling method	Release the emergency stop button after troubleshooting.		
Alarm signal	PS0233	Details	Performing positioning error
Analysis	System protective alarm.		
Handling method	Rerun after reset cancellation alarm or contact support personnel.		
Alarm signal	PS0234	Details	Decoding and interpolation communication error

Analysis	System protective alarm.		
Handling method	Rerun after reset cancellation alarm or contact support personnel.		
Alarm signal	PS0235	Details	Algorithm protection error 35
Analysis	Number of Nurbs blocks exceeds the maximum limit		
Handling method	Rerun after reset cancellation alarm or contact support personnel.		
Alarm signal	PS0236	Details	Tapping spindle speed is zero
Analysis	Spindle speed is not set before tapping.		
Handling method	Check whether the spindle speed is set in the program.		
Alarm signal	PS0237	Details	Algorithm protection error 37
Analysis	Nurbs interpolation calculation error		
Handling method	Rerun after reset cancellation alarm or contact support personnel.		
Alarm signal	PS0238	Details	G27 homing detection error
Analysis	Homing detection position is not at the reference point position.		
Handling method	Check whether the program command position is consistent with the reference point position.		
Alarm signal	PS0239	Details	Running too long, out of range of system counter
Analysis	System protective alarm.		
Handling method	Rerun after reset cancellation alarm or contact support personnel.		
Alarm signal	PS0240	Details	Second travel detection forbidden area
Analysis	The current position of the system indicates the second travel detection forbidden area.		
Handling method	Check whether the program commands entry into the second travel detection forbidden area.		
Alarm signal	PS0241	Details	Third travel detection forbidden area
Analysis	The current position of the system indicates the third travel detection forbidden area.		
Handling method	Check whether the program commands entry into the third travel detection forbidden area.		
Alarm signal	PS0243	Details	Spindle speed is zero
Analysis	The spindle speed is not commanded in per rotation feed modal.		
Handling method	Check whether the spindle speed is set in the program.		

Alarm signal	PS0244	Details	Performing illegal operation in G88 boring
Analysis	In G88 modal, there is no operating mode returning to the original after switching to operating mode.		
Handling method	Operating again after returning to the original operating mode.		
Alarm signal	PS0245	Details	Arithmetic protection error 45
Analysis	The speed less than 0 interpolated		
Handling method	Rerun after reset cancellation alarm; or contact support personnel.		
Alarm signal	PS0246	Details	Algorithm protection error 46
Analysis	The remaining time less than 0 interpolated		
Handling method	Rerun after reset cancellation alarm; or contact support personnel.		
Alarm signal	PS0247	Details	Algorithm protection error 47
Analysis	The distance less than 0 interpolated		
Handling method	Rerun after reset cancellation alarm; or contact support personnel.		
Alarm signal	PS0248	Details	Algorithm protection error 48
Analysis	The interpolation distance is inconsistent with the remaining distance		
Handling method	Rerun after reset cancellation alarm; or contact support personnel.		
Alarm signal	PS0249	Details	Algorithm protection error 49
Analysis	Interpolation super-linkage speed		
Handling method	Rerun after reset cancellation alarm; or contact support personnel.		
Alarm signal	PS0250	Details	Algorithm protection error 50
Analysis	The actual interpolation position is greater than the interpolation distance		
Handling method	Rerun after reset cancellation alarm; or contact support personnel.		
Alarm signal	PS0252	Details	The thread cutting speed is greater than the maximum allowable speed
Analysis	The synthetic speed of thread turning is greater than the set value of parameter #1224[maximum cutting feed synthetic speed]		
Handling method	Modify the program to reduce thread pitch or spindle speed; or raise the set value of parameter #1224.		
Alarm signal	PS0253	Details	Thread cutting spindle speed is zero

Analysis	Thread machining is not allowed when the spindle is not rotating		
Handling method	Modify the program to command spindle rotation before thread cutting.		
Alarm signal	PS0254	Details	Thread cutting spindle speed deviation is too big
Analysis	During thread cutting, the deviation between the actual spindle speed and the commanded speed is too big to allow thread machining		
Handling method	Check whether the spindle parameters are set correctly to reduce the deviation between the actual spindle speed and the commanded speed.		
	The following specific handling methods can be added:		
	(1) When the spindle has a transmission ratio, check the following parameters:		
	#5359:2[Spindle feedback angle takes 2nd coded disc]		
	#5000.4 ASFS:0[Whether spindle feedback speed considers gear ratio 0: Yes/1: No]		
	(2) When the spindle does not have a transmission ratio, check the following parameters:		
	Check whether the gear ratio setting parameter is 1 (#5160~#5168)		
	Check whether parameter #5108[number of pulses per rotation of encoder] is set correctly and confirm whether the angle of diagnosis #206 is in the range of 0~360 degrees.		
Alarm signal	PS0255	Details	Thread cutting spindle speed fluctuation is too big
Analysis	During thread cutting, the actual speed fluctuation of the spindle is too big to allow thread machining		
Handling method	Adjust spindle parameters to reduce spindle fluctuation.		
Alarm signal	PS0256	Details	Starting point is not detected in thread cutting
Analysis	Thread machining is not allowed because the starting point cannot be detected during thread cutting		
Handling method	Check the spindle one-turn signal.		
Alarm signal	PS0257	Details	Cannot switch dry run in variable pitch machining
Analysis	Cannot switch dry run in variable pitch machining.		
Handling method	Rerun after reset cancellation alarm.		
Alarm signal	PS0270	Details	Wrong parameters set for the shape of the chuck
Analysis	An alarm will be given when the length of the chuck jaw is less than or equal to the clamping length or the radius of the chuck jaw is less than or equal to the clamping height difference.		
Handling method	Modify the parameters to ensure that #1102 is greater than #1104 and #1103 is greater than #1105.		
Alarm signal	PS0271	Details	Wrong parameters set for the shape of the tailstock
Analysis	The diameter (2) of the tailstock is smaller than or equal to its aperture (3), with an alarm given.		

Handling method	Modify the parameters to ensure that #116 is greater than #1117.		
Alarm signal	PS0272	Details	Overlapped position of the chuck and the tip
Analysis	The position of the chuck is greater than that of the tailstock, causing the chuck to overlap with the top position.		
Handling method	Modify the parameters to ensure that #1107 is smaller than or equal to #1118.		
Alarm signal	PS0278	Details	Maximum speed of super spindle
Analysis	In rigid tapping, the maximum speed set by the spindle speed over-parameter (#2140~#2143).		
Handling method	Reduce the spindle speed during tapping or modify the parameter value (#2140~#2143).		
Alarm signal	PS0279	Details	The positioning spindle cannot be in the same block with other movement commands
Analysis	In the spindle positioning, the other spindles cannot have the movement command at the same time.		
Handling method	Spindle positioning and other axis movement commands are separated into two blocks.		
Alarm signal	PS0280	Details	Waiting M code mismatched
Analysis	Waiting M codes assigned by the two channels are not equal.		
Handling method	Modify the program so that the waiting M codes assigned by the two channels are between parameters #920 and #921 and equal.		
Alarm signal	PS0300.0	Details	Initializing communication alarm is incorrect
Analysis	Initializing communication alarm is incorrect. Handling method: Parameters 220~228 are set inconsistent with the actual connection or the connection is incorrect, and there is a problem with the hardware interface.		
Handling method	Set parameters correctly; replace hardware		
Alarm signal	PS0300.1	Details	Initializing communication alarm is incorrect
Analysis	A communication alarm error occurs during normal communication.		
Handling method	Handling method: Check connection and improve antijamming capability		
Alarm signal	PS0301	Details	The slave station gives C1D error alarm after the communication is normal
Analysis	The slave station gives an error alarm. Please refer to the GR Drive Specification for specific handling methods		
Handling method	Resolve the slave station alarm, power off and restart		
Alarm signal	PS0311.10	Details	System communication configuration parameter error

Analysis	Communication parameter check code read by initialization is incorrect		
Handling method	Communication parameter check code read by initialization is incorrect and needs to be restarted or replaced with hardware		
Alarm signal	PS0311.2	Details	System communication configuration parameter error
Analysis	An alarm will be given when there are errors in communication parameter data, communication cycle/number of slave stations/number of servos/number of spindles/number of IOs. Modify the parameter		
Handling method	Modify parameter 221~228		
Alarm signal	PS0312.1	Details	Communication verification error
Analysis	Parameter data communication check code from interface to position control is incorrect, with hardware failure		
Handling method	If restart failure still exists, please replace motherboard.		
Alarm signal	PS0312.2	Details	Communication verification error
Analysis	Parameter data communication check code from interface to position control is incorrect, with hardware failure		
Handling method	Replace the motherboard		
Alarm signal	PS0313	Details	Real-time data initialization read error
Analysis	If real-time data/core data initialization read error occurs, please restart after the first upgrade of the system. It is hardware failure.		
Handling method	If restart failure still exists, please replace motherboard.		

1.2 Servo and position control alarm (PV alarm)

Alarm prior to PV0~109 is drive alarm, with reference to GR Specification.

Alarm signal	PV110	Sub-alarm signal		Details	Servo speed command is abnormal.
Analysis	PID regulation speed command exceeds the allowable set value, and the diagnosis 102 displays the maximum command speed value.				
Solution	1. Confirm whether the position gain setting parameter 4009 is too big. 2. Confirm whether parameter 4254 is set correctly. 3. Confirm whether the command of position loop and bit 5 and 6 of 4003 in feedback direction are correct.				
Alarm signal	PV112	Sub-alarm signal		Details	Servo axis does not exist
Analysis	An alarm is given when invalid servo axis moves, and diagnosis 133 displays whether the servo axis is valid.				

Solution	1. Set 4000#0 to 1 to ignore this alarm. 2. Confirm whether parameter 225/226 is set correctly.				
Alarm signal	PV113	Sub-alarm signal	Axis name	Details	Coordinate update handshake timeout
Analysis	An error occurs in the system's internal data interaction reply				
Solution	Power off and restart.				
Alarm signal	PV114	Sub-alarm signal		Details	Synchronous mode command is illegal
Analysis	1. Shield the slave axis under synchronous control. 2. Change the synchronous control mode in the movement process. 3. Move the slave axis in manual, MPG and homing mode. 4. PLC axis control and synchronous axis control are selected at the same time.				
Solution	Operate correctly				
Alarm signal	PV115	Sub-alarm signal		Details	Synchronization error for positional deviation is too large
Analysis	The difference between the master and slave position deviations controlled synchronously is too large. Parameter 4023 is the set allowable value and is invalid when being set to 0. Diagnosis 141 displays the actual deviation error value.				
Solution	Correctly set parameters and solve mechanical problems				
Alarm signal	PV116	Sub-alarm signal		Details	Synchronization error of machine coordinate is too large
Analysis	The difference between master and slave machine coordinates controlled synchronously is too large. Parameter 4022 is the set allowable value and is invalid when being set to 0. Diagnosis 140 displays the actual deviation error value.				
Solution	Correctly set parameters and solve mechanical problems				
Alarm signal	PV119	Sub-alarm signal		Details	Synchronous torque difference limit alarm
Analysis	The difference between master and slave torques controlled synchronously is too large. Parameter 4025 is the set allowable value and is invalid when being set to 0. Diagnosis 142 displays the actual error value.				
Solution	Correctly set parameters and solve mechanical problems				
Alarm signal	PV120	Sub-alarm signal		Details	NC and PLC axis control commands competed
Analysis	Temporarily ineffective				
Solution					
Alarm signal	PV121	Sub-alarm signal		Details	PLC control axis cannot be changed
Analysis	An alarm will be given when it is switched to NC axis in PLC axis control operation.				
Solution	Operate correctly				
Alarm	PV122	Sub-	Jan 02	Details	Servo does not go home.

Appendix

signal		alarm signal			
Analysis	An alarm will be given if 4001#APZ is zero and a PLC axis control motion is commanded				
Solution	Do manual home first				
Alarm signal	PV123	Sub-alarm signal		Details	System position command is illegal
Analysis	An alarm will be given when the system command position cycle difference is greater than the value set by 4112 parameter. Diagnosis 128 displays the maximum command difference				
Solution	Power off and restart.				
Alarm signal	PV124	Sub-alarm signal		Details	Incremental raster axis not homing error
Analysis	An alarm will be given when the axis moves without manually homing after incremental raster control setting is valid.				
Solution	Do manual home first				
Alarm signal	PV125	Sub-alarm signal		Details	This raster scale equipment does not exist
Analysis	Set the 200 cycle length parameter to 16.				
Solution	Correctly set parameters				
Alarm signal	PV126	Sub-alarm signal		Details	The difference between the raster coordinate and the encoder coordinate exceeds the allowable value
Analysis	Parameter 4115 is an allowable setting value, and an alarm is ignored when set to 0 (generally not set to 0 for safety reasons); Diagnosis 145 is a feedback raster coordinate value, diagnosis 146 is a difference between raster and coded disc coordinates, and diagnosis 147 is the original raster feedback value.				
Solution	Set parameters correctly and solve mechanical problems				
Alarm signal	PV128	Sub-alarm signal		Details	System servo data error, and reset zero
Analysis	An alarm will be given when single-turn/multi-turn zero offset value is greater than or equal to the set value. Diagnosis 115/116 is a multi-turn/single-turn value, and diagnosis 151/152 is a current multi-turn/single-turn offset value.				
Solution	Reset 4001#APZ machine zero resolution.				
Alarm signal	PV129	Sub-alarm signal		Details	Alarm for axis operation when servo is disconnected
Analysis	In the case of disconnected servo axis, an alarm will be given for axis operation. Diagnosis 16 shows whether the servo axis is disconnected.				
Solution	Operate correctly				
Alarm signal	PV131	Sub-alarm signal		Details	Motion position out-of-tolerance

Analysis	The position difference between command and feedback during motion exceeds the maximum value set by parameter 4112, thus the value of parameter #4112 shall be appropriately increased; if an alarm is given under abnormal conditions, diagnostic parameters need to be observed to make a comprehensive judgment, which may be caused by unreasonable setting of other parameters.				
Solution	Set parameters correctly and solve mechanical problems				
Alarm signal	PV132	Sub-alarm signal		Details	PLC control axis cannot be changed
Analysis	At rest, the position difference between command and feedback exceeds the maximum value set by parameter 4111, thus the value of parameter #4111 shall be appropriately increased; if an alarm is given under abnormal conditions, diagnostic parameters need to be observed to make a comprehensive judgment, which may be caused by unreasonable setting of other parameters.				
Solution	Set parameters correctly and solve mechanical problems				
Alarm signal	PV133	Sub-alarm signal		Details	Torque deviation is too large under servo torque control
Analysis	Torque deviation is too large under servo torque control				
Solution	Set parameters correctly and solve mechanical problems				
Alarm signal	PV134	Sub-alarm signal		Details	The current homing position of the incremental raster is illegal
Analysis	Homing position is incorrect				
Solution	Homing away from block				
Alarm signal	PV135	Sub-alarm signal		Details	Servo feedback position is illegal
Analysis	Encoder data feedback is abnormal, resulting in excessive error in two adjacent cycles				
Solution	Replace hardware				
Alarm signal	PV0140	Sub-alarm signal		Details	Homing is abnormal
Analysis	The nth axis cannot be returned to the exact position during homing.				
	Enter the nth axis pitch parameter correctly or adjust homing block position.				
Solution	Correctly set parameters,				
Alarm signal	PV0141	Sub-alarm signal		Details	Positive soft limit
Analysis	The machine coordinate exceeds or equals to the set value of the n-th axis soft limit in system parameter #1081. Move the nth axis in the reverse direction away from the position set by parameter #1081.				
Solution	Move the nth axis in the reverse direction away from the position set by parameter #1081.				
Alarm signal	PV0142	Sub-alarm signal		Details	Negative soft limit

Analysis	The machine coordinate exceeds or equals to the set value of the n-th axis soft limit in system parameter #1081.				
Solution	Move the nth axis in the forward direction away from the position set by parameter #1081.				
Alarm signal	PV0143	Sub-alarm signal		Details	Forward hard over-travel
Analysis	The n-th axis forward limit switch is pressed to the limit block.				
Solution	The nth axis moves in the reverse direction away from the limit block position				
Alarm signal	PV0144	Sub-alarm signal		Details	Reverse hard over-travel
Analysis	The n-th axis reverse limit switch is pressed to the limit block				
Solution	The nth axis moves in the forward direction away from the limit block position				

1.3 Spindle alarm (PD alarm)

Alarm prior to PD0~109 is drive alarm, with reference to GR Specification.

Alarm signal	PD110	Sub-alarm signal		Details	Spindle closed loop out-of-tolerance alarm
Analysis	Under analog spindle closed loop function and rigid tapping, the difference between command and feedback position exceeds the tapping difference set.				
Solution	Correct the allowable value of static and dynamic out-of-tolerance of rigid tapping and check whether the setting parameters of spindle closed loop are appropriate.				
Alarm signal	PD111	Sub-alarm signal		Details	Spindle servo alarm
Analysis	It occurs when the spindle alarm function is valid and the spindle gives an alarm.				
Solution	Identify the cause of the spindle alarm or whether the spindle alarm level parameters are appropriately.				
Alarm signal	PD112	Sub-alarm signal		Details	Spindle speed is abnormal
Analysis	When the spindle speed fluctuation check function is valid, the spindle speed fluctuation range exceeds the set value.				
Solution	Check whether the set speed fluctuation detection parameters are appropriate and identify the cause of the spindle speed fluctuation.				
Alarm signal	PD113	Sub-alarm signal		Details	Broad allowable range of rigid tapping synchronization error is exceeded
Analysis	Under the valid analog spindle closed loop and rigid tapping, the synchronization error between spindle and tapping shaft exceeds the set allowable range.				
Solution	Correct the synchronization error setting range or identify whether the setting parameters for the spindle and tapping shaft are appropriate.				

Appendix

Appendix IIComparison Table of Servo Units and Servo Motors

Comparison Table of Adaptive Motors of Servo Drive Units

Motor code	Motor model	Rem arks	Motor code	Motor model	Re ma rks
101	60SJTR-MZ2003E(A4I)		146	130SJT-M075D(A4I)	
102	60SJTR-MZ2005E(A4I)		148	130SJT-M100B(A4I)	
104	80SJT-M024C(A4I)		150	130SJT-M100D(A4I)	
106	80SJT-M024E(A4I)		152	130SJT-M150B(A4I)	
108	80SJT-M032C(A4I)		154	130SJT-M150D(A4I)	
110	80SJTA-M032E(A4I)		156	130SJT-M050E(A4I)	
112	80SJTA-M024C(A4I)		158	130SJT-M060E(A4I)	
114	80SJTA-M024E(A4I)		160	130SJT-M075E(A4I)	
116	80SJTA-M032C(A4I)		162	130SJTE-M150D(A4I)	
118	80SJTA-M032E(A4I)		166	175SJT-M120E(A4I)	
120	110SJT-M020E(A4I)		168	175SJT-M150DA4I）	
122	110SJT-M040D(A4I)		170	175SJT-M180B(A4I)	
124	110SJT-M040E(A4I)		172	175SJT-M180D(A4I)	
126	110SJT-M060D(A4I)		174	175SJT-M220B(A4I)	
128	110SJT-M060E(A4I)		176	175SJT-M220D(A4I)	
140	130SJT-M040D(A4I)		178	175SJT-M300B(A4I)	
142	130SJT-M050D(A4I)		180	175SJT-M300D(A4I)	
144	130SJT-M060D(A4I)		182	175SJT-M380B(A4I)	
1200	130SJTG-M040GH(A4I)		1216	175SJTG-M220EH(A4I)	
1202	130SJTG-M050GH(A4I)		1218	175SJTG-M300EH(A4I)	
1204	130SJTG-M060GH(A4I)		1220	175SJTG-M380EH(A4I)	
1206	130SJTG-M075GH(A4I)		1222	175SJTG-M380BH(A4I)	
1208	130SJTG-M100GH(A4I)		1224	175SJTG-M380DH(A4I)	
1210	175SJTG-M120EH(A4I)		1226	175SJTG-M500BH(A4I)	
1212	175SJTG-M150EH(A4I)		1228	175SJTG-M500DH(A4I)	
1214	175SJTG-M180EH(A4I)				

Note: The motor model code is not shown in the table, but the corresponding code can be found in the GR Series Servo Specification.